NEWAUKUM BRIDGE NO. 20 REPLACEMENT PROJECT

TOWNSHIP 13 NORTH, RANGE 2 WEST, W.M.

LEWIS COUNTY, WASHINGTON

VICINITY MAP

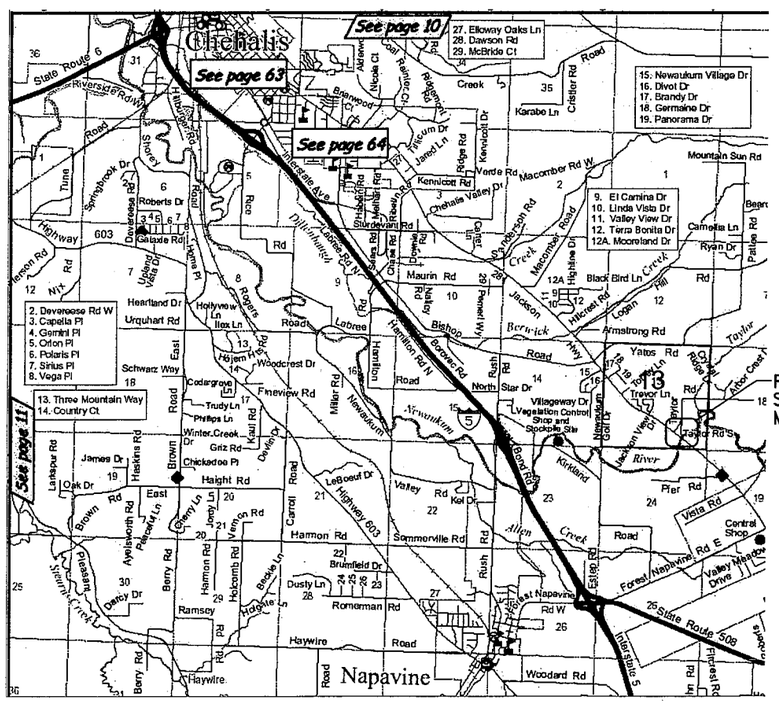

LOCATION MAP

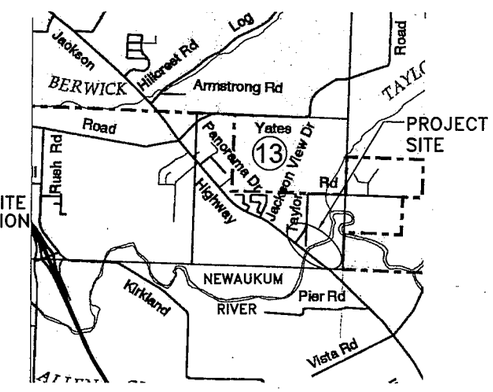

APPROVED FOR CONSTRUCTION

COUNTY ENGINEER — DATE 1/6/10

DRAWING LIST

Drawing No.	Sheet No.	Drawing Title
T-1	1	Title Sheet - Vicinity Map & Sheet Index
C-1	2	General Notes & Summary of Quantities
C-2	3	ROW Plan
C-3	4	Site Preparation Plan - Sheet 1
C-4	5	Site Preparation Plan - Sheet 2
C-5	6	Stormwater Pollution Prevention Plan (TESC) - Sheet 1
C-6	7	Stormwater Pollution Prevention Plan (TESC) - Sheet 2
C-7	8	Temporary Erosion & Sediment Control - Notes and Details
C-8	9	Construction Signs
C-9	10	Roadway Sections
C-10	11	Roadway Plan & Profile - Sheet 1
C-11	12	Roadway Plan & Profile - Sheet 2
C-12	13	Roadway Plan & Profile - Sheet 3
C-13	14	Drainage Profiles & Details - Sheet 1
C-14	15	Drainage Profiles & Details - Sheet 2
C-15	16	Drainage Profiles & Details - Sheet 3
C-16	17	Misc Plans, Profiles & Details
C-17	18	Guardrail Layout Plans
C-18	19	SE Wall Layout - Sheet 1
C-19	20	SE Wall Layout - Sheet 2
C-20	21	SE Wall Layout - Sheet 3
C-21	22	Embankment Armoring

Drawing No.	Sheet No.	Drawing Title
S-1	23	General Plan & Elevation
S-2	24	General Structural Notes & Construction Sequence
S-3	25	Foundation Layout
S-4	26	Drilled Shafts Details - Piers 1 & 3
S-5	27	Drilled Shafts & Column Details - Pier 2
S-6	28	Pier 1 - Plan & Section
S-7	29	Pier 1 - Elevation & Details
S-8	30	Pier 3 - Plan & Section
S-9	31	Pier 3 - Elevation & Details
S-10	32	Stub Wall Details
S-11	33	Miscellaneous Details
S-12	34	Pier 2 - Plan & Section
S-13	35	Pier 2 - Elevation & Details
S-14	36	Bearing Details
S-15	37	Framing Plan & Cross Section
S-16	38	W41DG Girder Details - Sheet 1
S-17	39	W41DG Girder Details - Sheet 2
S-18	40	Intermediate Diaphragm Details
S-19	41	End Diaphragm Details
S-20	42	Single Slope Traffic Barrier - Sheet 1
S-21	43	Single Slope Traffic Barrier - Sheet 2
S-22	44	Bridge Railing Type BP - Sheet 1
S-23	45	Bridge Railing Type BP - Sheet 2
S-24	46	Work Platform

MARK	REVISION DESCRIPTION	BY	APP.	DATE

BergerABAM
33301 9th Avenue South, Suite 300
Federal Way, Washington 98003-2600
(206) 431-2300 Fax: (206) 431-2250

Lewis County

CHARLES W. SPRIK — STATE OF WASHINGTON — 21872 — STRUCTURAL ENGINEER — PROFESSIONAL ENGINEER

LEWIS COUNTY DEPT. OF PUBLIC WORKS

ENGINEER — DATE

DRAWN BY LWC
DESIGN BY LWC
CHECK BY SPT
PROJ MGR CWS

LEWIS COUNTY DEPARTMENT OF PUBLIC WORKS
NEWAUKUM BRIDGE NO. 20 REPLACEMENT PROJECT

TITLE SHEET
VICINITY MAP & SHEET INDEX

DRAWING NO. T-1
PROJECT NO. CRP 2072
FED AID NO. BRS-5667(002)
DATE: 12/15/09
SHEET NO. 1 OF 46

GENERAL NOTES

1. ALL WORK SHALL CONFORM TO THE WASHINGTON STATE STANDARD SPECIFICATIONS FOR ROAD, BRIDGE, AND MUNICIPAL CONSTRUCTION, DATED 2008 AND AMENDMENTS.

2. ONLY VISIBLE UTILITIES ARE SHOWN ON THESE PLANS. NO UNDERGROUND LOCATES HAVE BEEN PERFORMED OR TIED FOR THIS SURVEY. IT IS THE SOLE RESPONSIBILITY OF THE CONTRACTOR TO INDEPENDENTLY VERIFY THE ACCURACY OF ALL UTILITY LOCATIONS SHOWN, AND TO FURTHER DISCOVER AND AVOID ANY OTHER UTILITIES NOT SHOWN HEREON WHICH MAY BE AFFECTED BY THE IMPLEMENTATION OF THIS PLAN. THE CONTRACTOR SHALL VERIFY LOCATION OF UTILITIES AND SHALL COORDINATE THEIR WORK WITH ALL THE AFFECTED UTILITY COMPANIES. CALL 1-800-424-5555 48 HOURS BEFORE CONSTRUCTION FOR UTILITY LOCATIONS.

3. CONTRACTOR IS RESPONSIBLE FOR ASSURING ALL WORK IS DONE TO THE ALIGNMENTS, GRADES, AND ELEVATIONS CALLED FOR IN THESE PLANS.

4. APPROVED PLANS AND RECORD DOCUMENTS: A COPY OF THE APPROVED PLANS AND SPECS SHALL BE ON SITE WHENEVER CONSTRUCTION IS IN PROGRESS. THROUGHOUT THE PROGRESS OF THE WORK ON THIS CONTRACT, THE CONTRACTOR SHALL MAINTAIN AN ACCURATE RECORD OF CHANGES IN THE CONTRACT DOCUMENTS. UPON COMPLETION OF THIS CONTRACT, PROVIDE ONE COMPLETE SET OF RECORD DOCUMENTS.

5. HORIZONTAL DATUM: THE BASIS OF BEARING AND BEARINGS HEREON ARE PROVIDED BY LEWIS COUNTY. THE CONTRACTOR SHALL CONTACT LEWIS COUNTY FOR ADDITIONAL SURVEY DATUM INFORMATION.

6. THIS SURVEY WAS PERFORMED USING RTK OBSERVATIONS OF MULTIPLE WSDOT MONUMENTS.

   BEARINGS HEREON ARE GRID BEARINGS AS DERIVED FROM WSDOT MONUMENT GP21005-28 AND GP21005-29 HORIZONTAL DISTANCES ARE GROUND DISTANCES.

   ELEVATIONS HEREON ARE NGVD 1929 AS DERIVED FROM WSDOT MONUMENT GP21005-25 CONVERTED FROM NAVD 1988 USING CORPSCON CONVERTION PROGRAM.

7. DURING CONSTRUCTION, THE CONTRACTOR SHALL BE REQUIRED TO CONTROL DRAINAGE ON-SITE SURFACEWATER RUNOFF BY USING TEMPORARY OR PERMANENT EROSION/ SILTATION CONTROL PROCEDURES.

8. THE CONTRACTOR SHALL MAINTAIN AND PROTECT PUBLIC STREETS, PRIVATE PROPERTY, AND UTILITIES. THE CONTRACTOR SHALL ALSO KEEP CLEAN ALL PUBLIC STREETS AND PRIVATE PROPERTY.

9. ALL REFERENCES MADE TO STANDARD PLANS SHALL BE TO THE WASHINGTON STATE DEPARTMENT OF TRANSPORTATION AND SHALL BE IN ACCORDANCE WITH THE LATEST PUBLISHED EDITION.

10. FOR "SPECIAL" ITEMS, SEE SPECIAL PROVISIONS.

11. NO STAGING OR LAYDOWN AREA IS PROVIDED BY THE CONTRACTING AGENCY. THE CONTRACTOR SHALL BE RESPONSIBLE TO LOCATE AND SECURE SAID PROPERTY AND MUST MEET THE REQUIREMENTS OF SETBACK AS STATED IN SECTION 1-07.5 OF THE SPECIAL PROVISIONS.

12. CONTRACTOR TO PROVIDE ACCESS TO ADJACENT PROPERTIES AT ALL TIMES.

ITEM #	QTY	UNITS	ITEM DESCRIPTION
			PREPARATION
1	1	L.S.	MOBILIZATION
2	1.0	ACRE	CLEARING AND GRUBBING
3	1	L.S.	REMOVING EXISTING BRIDGE
4	387	L.F.	REMOVING GUARDRAIL
5	10	EACH	REMOVING GUARDRAIL ANCHOR
			GRADING
6	534	C.Y.	ROADWAY EXCAVATION INCL. HAUL
7	6,771	TON	GRAVEL BORROW INCL. HAUL
8	3,660	C.Y.	EMBANKMENT COMPACTION
			DRAINAGE
9	3,767	C.Y.	DITCH EXCAVATION INCL. HAUL
10	9	EACH	GRATE INLET TYPE 2
11	9	EACH	FRAME AND VANED GRATES FOR GRATE INLET TYPE 2
12	1,566	TON	STREAMBED GRAVEL
13	12	C.Y.	HAND PLACED RIPRAP
14	1	L.S.	DEWATERING
15	2,784	TON	RIPRAP, CLASS III
16	1,107	TON	FILTER STONE
17	205	L.F.	UNDERDRAIN PIPE 6 IN. DIAM.
18	50	L.F.	DRAIN PIPE 6 IN. DIAM.
			STORM SEWER
19	709	L.F.	TESTING STORM SEWER PIPE
20	709	L.F.	SOLID WALL PVC STORM SEWER PIPE 12 IN. DIAM.
			STRUCTURE
21	375	C.Y.	STRUCTURE EXCAVATION CLASS A INCL. HAUL
22	1	L.S.	SHORING OR EXTRA EXCAVATION CL. A
23	215	C.Y.	SOIL EXCAVATION FOR SHAFT INCLUDING HAUL
24	125	C.Y.	GRAVEL BACKFILL FOR WALL
25	50	C.Y.	GRAVEL BACKFILL FOR DRAIN
26	186	L.F.	FURNISHING & PLACING TEMP. CASING FOR 4'-0" DIAM. SHAFT
27	53	L.F.	FURNISHING & PLACING TEMP. CASING FOR 9'-0" DIAM. SHAFT
28	11	L.F.	FURNISHING PERMANENT CASING FOR 9'-0" DIAM. SHAFT
29	1	EACH	PLACING PERMANENT CASING FOR 9'-0" DIAM. SHAFT
30	25	L.F.	CASING SHORING
31		EST.	REMOVING SHAFT OBSTRUCTIONS
32	1,000	LB.	EPOXY-COATED ST. REINF. BAR FOR BRIDGE
33	40,000	LB.	ST. REINF. BAR FOR BRIDGE
34	55,000	LB.	ST. REINF. BAR FOR SHAFT
35	1,017	L.F.	CSL ACCESS TUBE
36	5	EACH	CSL TESTING
37	257	C.Y.	CONC. CLASS 4000 FOR BRIDGE
38	190	C.Y.	CONC. CLASS 4000P FOR SHAFT
39	1	L.S.	SUPERSTRUCTURE - NEWAUKUM BRIDGE NO. 20
40	7,087	S.F.	STRUCTURAL EARTH WALL
41	1,087	C.Y.	BACKFILL FOR STRUCTURAL EARTH WALL INCL. HAUL
42	747	S.Y.	WATERPROOFING
43	104	TON	HMA CL. 1/2 IN. PG 64-22 FOR BRIDGE DECK
44	1	L.S.	TEMPORARY WORK PLATFORM
45	1	L.S.	SPECIAL EXCAVATION AND BACKFILL, INCL. HAUL

ITEM #	QTY	UNITS	ITEM DESCRIPTION
			SURFACING
46	2,900	TON	CRUSHED SURFACING BASE COURSE
47	586	TON	CRUSHED SURFACING TOP COURSE
48	0.36	MI.	SHOULDER FINISHING
			LIQUID ASPHALT
49		EST.	ANTI-STRIPPING ADDITIVE
			CEMENT CONCRETE PAVEMENT
50	222	S.Y.	BRIDGE APPROACH SLAB
			HOT MIX ASPHALT
51	134	S.Y.	PLANING BITUMINOUS PAVEMENT
52	1,034	TON	HMA CL. 1/2 IN. PG 64-22
53	21	TON	HMA FOR APPROACH CL. 1/2 IN. PG 64-22
			EROSION CONTROL AND PLANTING
54	50	DAY	ESC LEAD
55	36	L.F.	CHECK DAM
56	820	S.Y.	STABILIZED CONSTRUCTION ENTRANCE
57	9	EACH	INLET PROTECTION
58	1,758	L.F.	SILT FENCE
59		EST.	EROSION/WATER POLLUTION CONTROL
60	1.0	ACRE	SEEDING, FERTILIZING, AND MULCHING
61	187	C.Y.	TOPSOIL TYPE C
62	296	L.F.	WATTLE
63	800	L.F.	HIGH VISIBILITY FENCE
64	634	S.Y.	BIOSWALE SEED MIX
			TRAFFIC
65	1,189	L.F.	EXTRUDED CURB - TYPE 5
66	883	L.F.	BEAM GUARDRAIL TYPE 31 - 8 FT. LONG POST
67	4	EACH	BEAM GUARDRAIL TRANSITION SECTION TYPE 22
68	2	EACH	BEAM GUARDRAIL TYPE 31 NON-FLARED TERMINAL
69	4	EACH	BEAM GUARDRAIL ANCHOR TYPE 10
70	4	EACH	THRIE BEAM TERMINAL END SECTION DESIGN F
71	80	L.F.	TEMPORARY CONC. BARRIER
72	1,400	L.F.	CONDUIT PIPE 4 IN. DIAM.
73	8	EACH	TYPE III BARRICADE
			OTHER ITEMS
74	800	C.Y.	STRUCTURE EXCAVATION CLASS B INCL. HAUL
75	90	S.F.	SHORING OR EXTRA EXCAVATION CLASS B
76	170	C.Y.	GRAVEL BACKFILL FOR PIPE ZONE BEDDING
77	20	MGAL	WATER
78	110	TON	ROCK FOR ROCK WALL
79	220	S.Y.	CONSTRUCTION GEOTEXTILE FOR UNDERGROUND DRAINAGE
80		CALC	MINOR CHANGE
81		EST.	ROADSIDE CLEANUP
82	1	L.S.	SPCC PLAN
83	600	HR	TRAINING

AVOID CUTTING UNDERGROUND UTILITY LINES. IT'S COSTLY.

Call before you Dig
1-800-424-5555
UNDERGROUND SERVICE (USA)

NOTE:

EXISTING UTILITY LOCATIONS SHOWN HEREON ARE APPROXIMATE ONLY. IT SHALL BE THE CONTRACTOR'S RESPONSIBILITY TO DETERMINE THE EXACT VERTICAL AND HORIZONTAL LOCATION OF ALL EXISTING UNDER-GROUND AND OVERHEAD UTILITIES PRIOR TO COMMENCING CONSTRUCTION. NO REPRESENTATION IS MADE THAT ALL EXISTING UTILITIES ARE SHOWN HEREON. THE ENGINEER ASSUMES NO RESPONSIBILITY FOR UTILITIES NOT SHOWN OR UTILITIES NOT SHOWN IN THEIR PROPER LOCATION.

MARK	REVISION DESCRIPTION	BY	APP.	DATE

BergerABAM
33301 9th Avenue South, Suite 300
Federal Way, Washington 98003-2600
(206) 431-2300 Fax: (206) 431-2250

Lewis County Department of Public Works

CHARLES W. SPRY STATE OF WASHINGTON 21872 STRUCTURAL ENGINEER PROFESSIONAL ENGINEER 12-16-09

LEWIS COUNTY DEPT. OF PUBLIC WORKS

ENGINEER DATE

DRAWN BY JCR
DESIGN BY JCR
CHECK BY SPT
PROJ MGR CWS

LEWIS COUNTY DEPARTMENT OF PUBLIC WORKS
NEWAUKUM BRIDGE NO. 20 REPLACEMENT PROJECT

GENERAL NOTES & SUMMARY OF QUANTITIES

DRAWING NO. C-1
PROJECT NO. CRP 2072
FED AID NO. BRS-5667(002)
DATE: 12/15/09
SHEET NO. 2 OF 46

THIS SURVEY WAS PERFORMED USING RTK OBSERVATIONS OF MULTIPLE WSDOT MONUMENTS.

BEARINGS HEREON ARE GRID BEARINGS AS DERIVED FROM WSDOT MONUMENT GP21005-28 AND GP21005-29 HORIZONTAL DISTANCES ARE GROUND DISTANCES.

ELEVATIONS HEREON ARE NGVD 1929 AS DERIVED FROM WSDOT MONUMENT GP21005-25 CONVERTED FROM NAVD 1988 USING CORPSCON CONVERTION PROGRAM.

COORDINATES ARE LOCAL.

RIGHT-OF-WAY FOR:
JACKSON HIGHWAY ARE CALCULATED FROM SHEETS 5-13 OF 13 DATED JUNE 25TH 1925 WITH ADJUSTMENT AS REQUIRED TO FIT LOCATED ROADWAY CENTERLINE. TIES SHOWN ON THE PLAN SHEET FIT WELL NEAREST THE PROJECT LOCATION.

TAYLOR ROAD ALIGNMENT IS BASED ON 1968 AND MODIFICATIONS AS SHOWN ON 1978 UPDATE, PER TIES TO SHOWN SECTON CORNERS ALIGNMENT FIT WELL.

NOTE: ONLY VISIBLE UTILITIES ARE SHOWN, NO UNDERGROUND LOCATES HAVE BEEN PERFORMED OR TIED FOR THIS SURVEY.

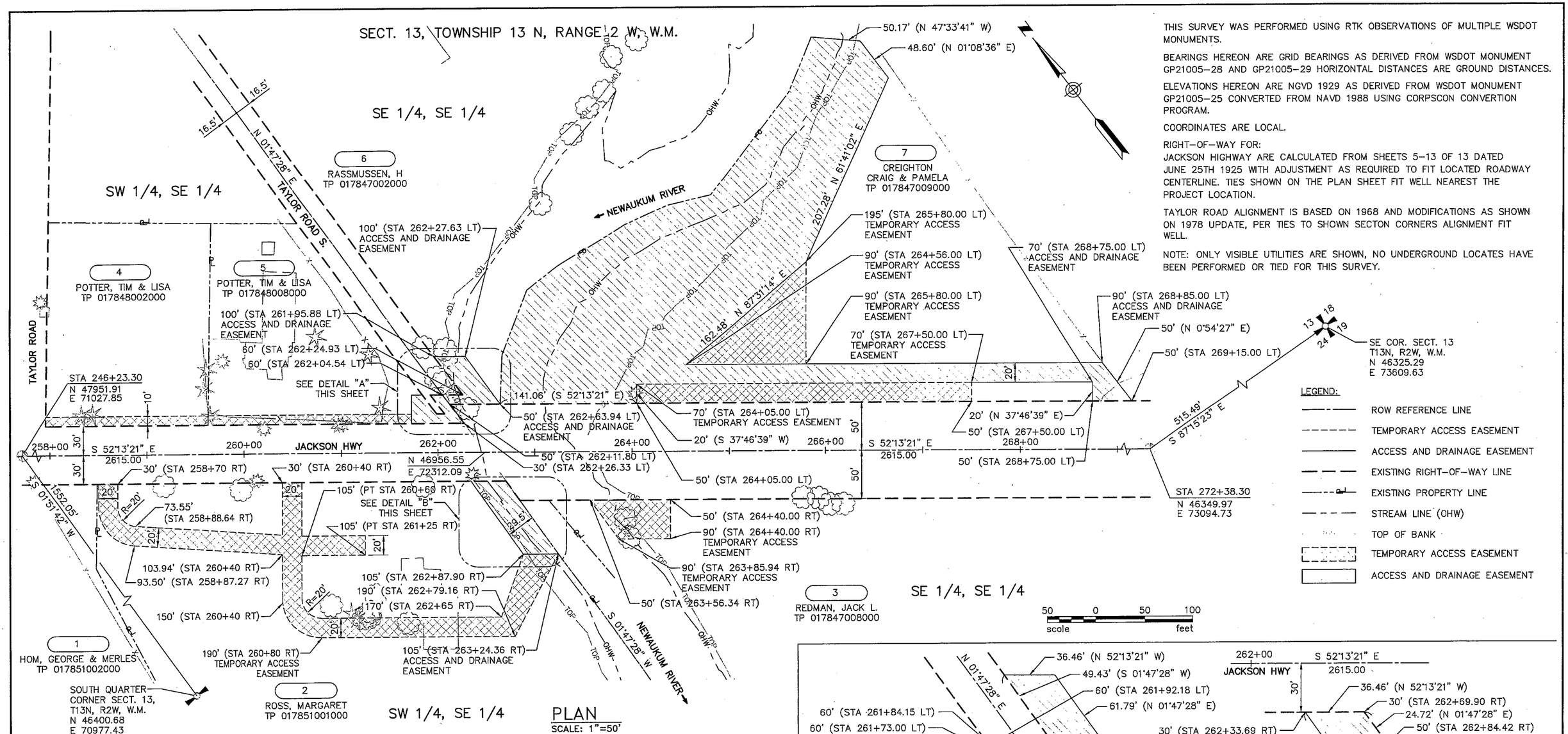

PLAN
SCALE: 1"=50'

OWNERSHIP				
TAX PARCEL	PARCEL NO.	NAME	TEMPORARY ACCESS EASEMENT	ACCESS AND DRAINAGE EASEMENT
017851002000	1	HOM, GEORGE & MERLES		
017851001000	2	ROSS, MARGARET	15,144 S.F.	2,734 S.F.
017847008000	3	REDMAN, JACK L.	2,754 S.F.	
017848002000	4	POTTER, TIM & LISA	1,668 S.F.	
017848008000	5	POTTER, TIM & LISA	2,105 S.F.	1,112 S.F.
017847002000	6	RASSMUSSEN, H		1,791 S.F.
017847009000	7	CREIGHTON, CRAIG & PAMELA	13,410 S.F.	71,001 S.F.

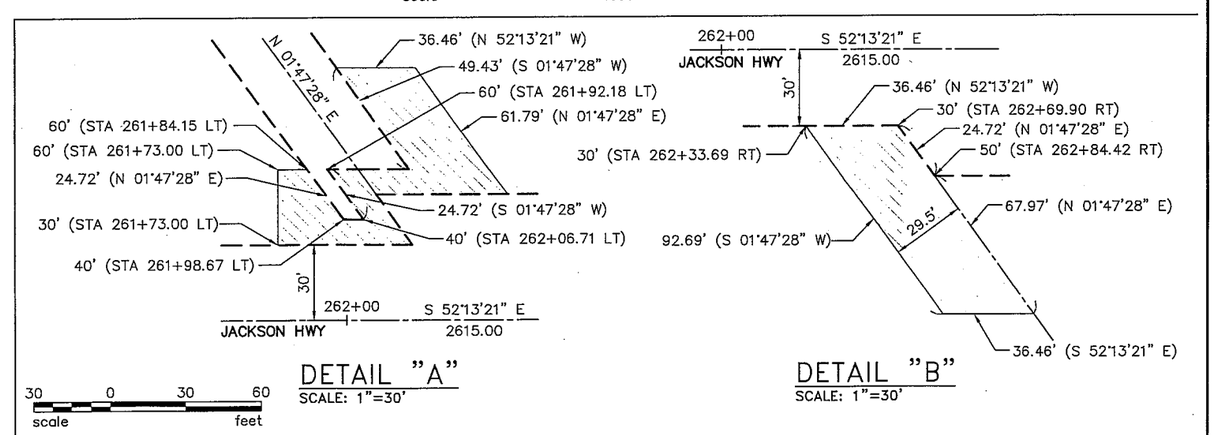

DETAIL "A"
SCALE: 1"=30'

DETAIL "B"
SCALE: 1"=30'

MARK	REVISION DESCRIPTION	BY	APP.	DATE

BergerABAM
33301 9th Avenue South, Suite 300
Federal Way, Washington 98003-2600
(206) 431-2300 Fax: (206) 431-2250

Lewis County Department of Public Works

CHARLES W. SPAY, STATE OF WASHINGTON, 21872, STRUCTURAL ENGINEER, PROFESSIONAL ENGINEER
6-16-09

LEWIS COUNTY DEPT. OF PUBLIC WORKS
ENGINEER DATE

DRAWN BY JCR
DESIGN BY JCR
CHECK BY SPT
PROJ MGR CWS

LEWIS COUNTY DEPARTMENT OF PUBLIC WORKS
NEWAUKUM BRIDGE NO. 20 REPLACEMENT PROJECT

ROW PLAN

DRAWING NO. C-2
PROJECT NO. CRP 2072
FED AID NO. BRS-5667(002)
DATE: 12/15/09
SHEET NO. 3 OF 46

SE 1/4, SECT. 13, TOWNSHIP 13 N, RANGE 2 W, W.M.

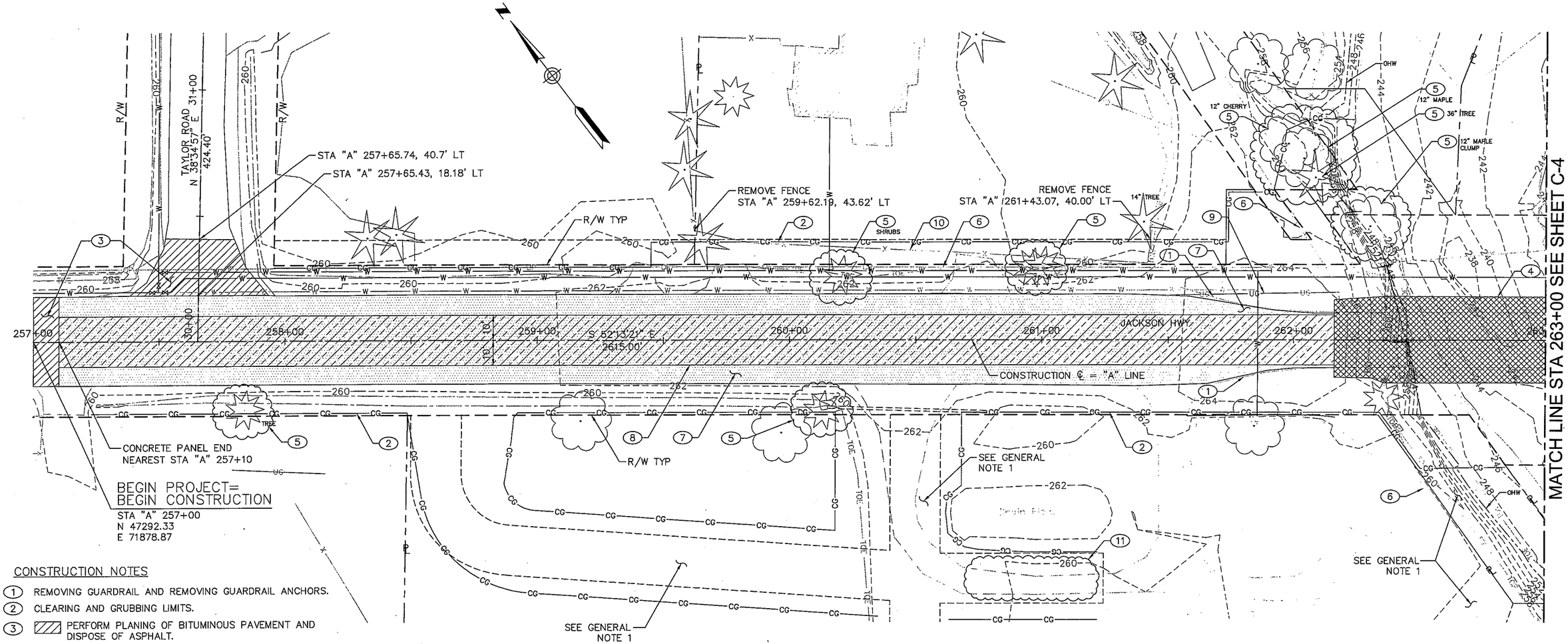

PLAN

SCALE: 1"=20'

CONSTRUCTION NOTES

1. REMOVING GUARDRAIL AND REMOVING GUARDRAIL ANCHORS.
2. CLEARING AND GRUBBING LIMITS.
3. PERFORM PLANING OF BITUMINOUS PAVEMENT AND DISPOSE OF ASPHALT.
4. REMOVE/DISPOSE OF EXISTING BRIDGE, PIERS, ABUTMENTS, AND WALLS. SEE SPECIAL PROVISIONS.
5. CLEAR AND GRUB MISC. TREES AS NECESSARY AND AS APPROVED BY THE ENGINEER.
6. OVERHEAD UTILITY POLE AND LINES TO BE RELOCATED DURING CONSTRUCTION (BY OTHERS).
7. REMOVE/DISPOSE OF BITUMINOUS PAVEMENT AS ROADWAY EXCAVATION.
8. REMOVE CONCRETE ROAD PANELS BENEATH ASPHALT AS ROADWAY EXCAVATION. SEE SPECIAL PROVISIONS.
9. RELOCATION OF UNDERGROUND UTILITIES DURING CONSTRUCTION SHALL BE DONE BY OTHERS.
10. PROPERTY OWNER TO REMOVE FENCE FOR CONTRACTOR ACCESS DURING CONSTRUCTION.
11. CONTRACTOR TO POTHOLE DRAIN LINE FROM HOUSE TO DRAIN FIELD TO ENSURE THE PIPE IS SLEEVED AND PROTECTED FOR THE NEW DRIVEWAY. THE CONTRACTOR SHALL COORDINATE WITH THE COUNTY FOR THIS WORK. THIS WORK SHALL BE INCIDENTAL TO OTHER WORK ITEMS.

GENERAL NOTES

1. SEE SHEET C-2 FOR RIGHT-OF-WAY, ACCESS AND DRAINAGE EASEMENT, AND TEMPORARY ACCESS EASEMENT AREAS AND LIMITS.
2. SEE SHEET C-5 AND C-6 FOR CLEARING AND GRUBBING LIMITS

LEGEND:

- OHW ORDINARY HIGH WATER
- EXISTING R/W
- EXISTING BRIDGE
- TOE — TOE OF SLOPE
- TOP — TOP OF BANK
- PROPERTY LINE
- TEMPORARY ACCESS EASEMENT
- GUARDRAIL
- FENCE LINE
- CENTER LINE
- 260 — CONTOUR LINE
- W — FUTURE WATER LINE (BY OTHERS)
- EXIST. WATER LINE
- UC — 6" DIAM. UNDERGROUND CONDUIT
- UNDERGROUND GAS LINE
- EDGE OF PAVEMENT
- CURB LINE
- CG — CLEARING & GRUBBING
- OP — EXISTING OVERHEAD POWER
- WETLAND
- BUILDING

20 0 20 40
scale feet

AVOID CUTTING UNDERGROUND UTILITY LINES. IT'S COSTLY.

Call before you Dig
1-800-424-5555
UNDERGROUND SERVICE (USA)

NOTE:

EXISTING UTILITY LOCATIONS SHOWN HEREON ARE APPROXIMATE ONLY. IT SHALL BE THE CONTRACTOR'S RESPONSIBILITY TO DETERMINE THE EXACT VERTICAL AND HORIZONTAL LOCATION OF ALL EXISTING UNDER-GROUND AND OVERHEAD UTILITIES PRIOR TO COMMENCING CONSTRUCTION. NO REPRESENTATION IS MADE THAT ALL EXISTING UTILITIES ARE SHOWN HEREON. THE ENGINEER ASSUMES NO RESPONSIBILITY FOR UTILITIES NOT SHOWN OR UTILITIES NOT SHOWN IN THEIR PROPER LOCATION.

MARK	REVISION DESCRIPTION	BY	APP.	DATE

BergerABAM
33301 9th Avenue South, Suite 300
Federal Way, Washington 98003-2600
(206) 431-2300 Fax: (206) 431-2250

Lewis County Department of Public Works

CHARLES W. SPRY — STATE OF WASHINGTON — 21872 — STRUCTURAL ENGINEER — PROFESSIONAL ENGINEER — 12-16-09

LEWIS COUNTY DEPT. OF PUBLIC WORKS
ENGINEER DATE

DRAWN BY LWC
DESIGN BY LWC
CHECK BY SPT
PROJ MGR CWS

LEWIS COUNTY DEPARTMENT OF PUBLIC WORKS

NEWAUKUM BRIDGE NO. 20 REPLACEMENT PROJECT

SITE PREPARATION PLAN
SHEET 1

DRAWING NO. C-3
PROJECT NO. CRP 2072
FED AID NO. BRS-5667(002)
DATE: 12/15/09
SHEET NO. 4 OF 46

SE 1/4, SECT. 13, TOWNSHIP 13 N, RANGE 2 W, W.M.

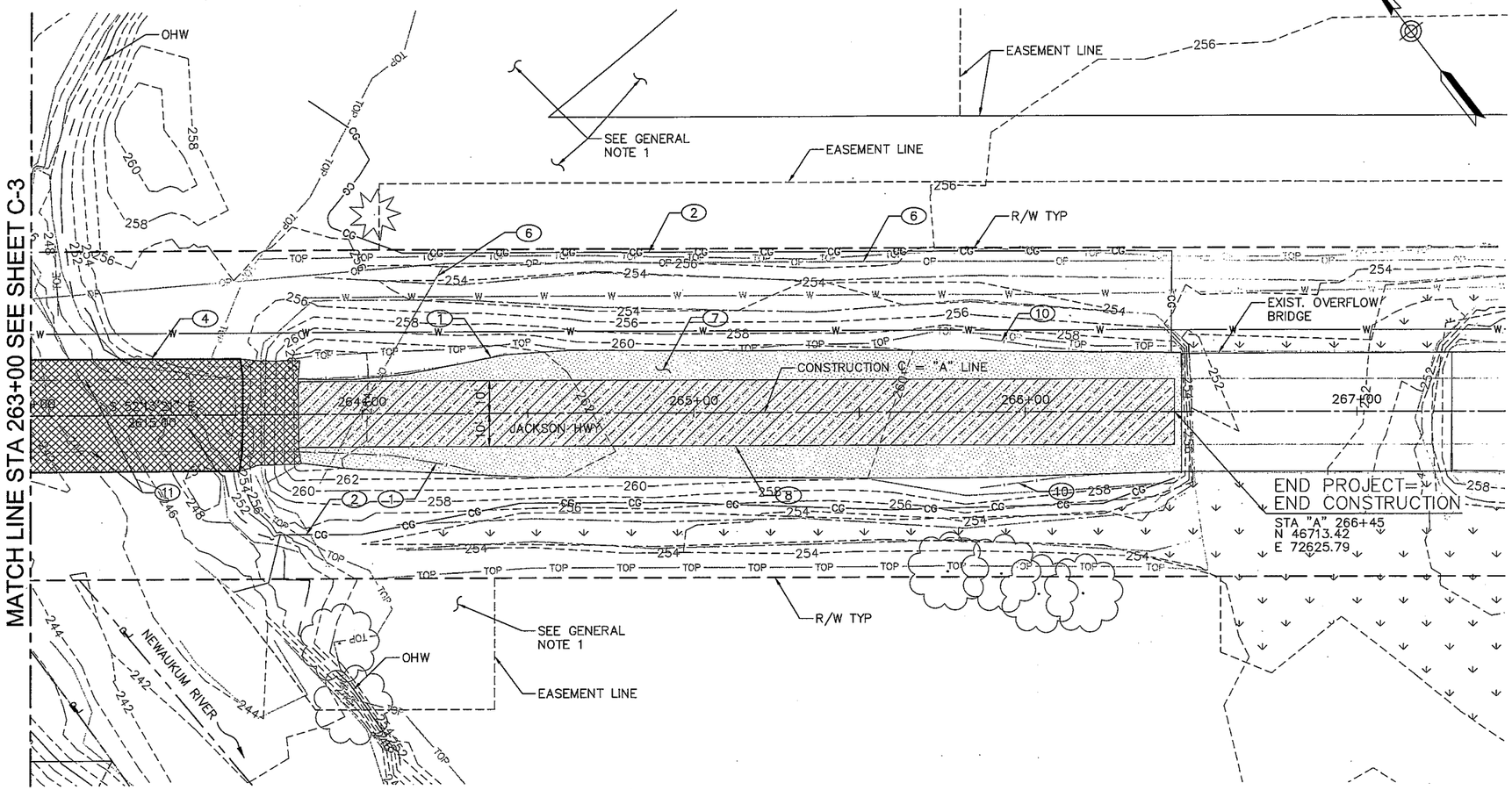

PLAN
SCALE: 1"=20'

CONSTRUCTION NOTES

1. LIMITS OF REMOVING GUARDRAIL AND REMOVING GUARDRAIL ANCHORS.
2. CLEARING AND GRUBBING LIMITS.
3. PERFORM PLANING OF BITUMINOUS PAVEMENT AND DISPOSE OF ASPHALT.
4. REMOVE/DISPOSE OF EXISTING BRIDGE, PIERS, ABUTMENTS, AND WALLS. SEE SPECIAL PROVISIONS.
5. CLEAR AND GRUB MISC. TREES AS NECESSARY AND AS APPROVED BY THE ENGINEER.
6. OVERHEAD UTILITY POLE AND LINES TO BE RELOCATED DURING CONSTRUCTION (BY OTHERS).
7. REMOVE/DISPOSE OF BITUMINOUS PAVEMENT AS ROADWAY EXCAVATION.
8. REMOVE CONCRETE ROAD PANELS BENEATH ASPHALT AS ROADWAY EXCAVATION. SEE SPECIAL PROVISIONS.
9. RELOCATION OF OVERHEAD AND UNDERGROUND UTILITIES DURING CONSTRUCTION SHALL BE DONE BY OTHERS.
10. REMOVE EXISTING GUARDRAIL END SECTION AND ADJUST AS NEEDED FOR NEW GUARDRAIL TIE-IN, SEE DWG C-17
11. UTILITIES LOCATED ON EXISTING BRIDGE. GAS AND WATER TO BE RELOCATED DURING CONSTRUCTION BY OTHERS. THIS WORK IS TO INCLUDE ADJUSTMENT OF VALVES, MH, ECT. TO GRADE.

GENERAL NOTES

1. SEE SHEET C-2 FOR RIGHT-OF-WAY, ACCESS AND DRAINAGE EASEMENT, AND TEMPORARY ACCESS EASEMENT AREAS AND LIMITS.
2. SEE SHEET C-5 AND C-6 FOR CLEARING AND GRUBBING LIMITS.

LEGEND:

SEE SHEET C-3

20 0 20 40
scale feet

AVOID CUTTING UNDERGROUND UTILITY LINES. IT'S COSTLY.

Call before you Dig
1-800-424-5555
UNDERGROUND SERVICE (USA)

NOTE:

EXISTING UTILITY LOCATIONS SHOWN HEREON ARE APPROXIMATE ONLY. IT SHALL BE THE CONTRACTOR'S RESPONSIBILITY TO DETERMINE THE EXACT VERTICAL AND HORIZONTAL LOCATION OF ALL EXISTING UNDER-GROUND AND OVERHEAD UTILITIES PRIOR TO COMMENCING CONSTRUCTION. NO REPRESENTATION IS MADE THAT ALL EXISTING UTILITIES ARE SHOWN HEREON. THE ENGINEER ASSUMES NO RESPONSIBILITY FOR UTILITIES NOT SHOWN OR UTILITIES NOT SHOWN IN THEIR PROPER LOCATION.

MARK	REVISION DESCRIPTION	BY	APP.	DATE

BergerABAM
33301 9th Avenue South, Suite 300
Federal Way, Washington 98003-2600
(206) 431-2300 Fax: (206) 431-2250

Lewis County Department of Public Works

CHARLES W. SPRY, STATE OF WASHINGTON, 21872, STRUCTURAL ENGINEER, PROFESSIONAL ENGINEER
12-16-09

LEWIS COUNTY DEPT. OF PUBLIC WORKS
ENGINEER DATE

DRAWN BY LWC
DESIGN BY LWC
CHECK BY SPT
PROJ MGR CWS

LEWIS COUNTY DEPARTMENT OF PUBLIC WORKS
NEWAUKUM BRIDGE NO. 20 REPLACEMENT PROJECT

SITE PREPARATION PLAN
SHEET 2

DRAWING NO. C-4
PROJECT NO. CRP 2072
FED AID NO. BRS-5667(002)
DATE: 12/15/09
SHEET NO. 5 OF 46

SE 1/4, SECT. 13, TOWNSHIP 13 N, RANGE 2 W, W.M.

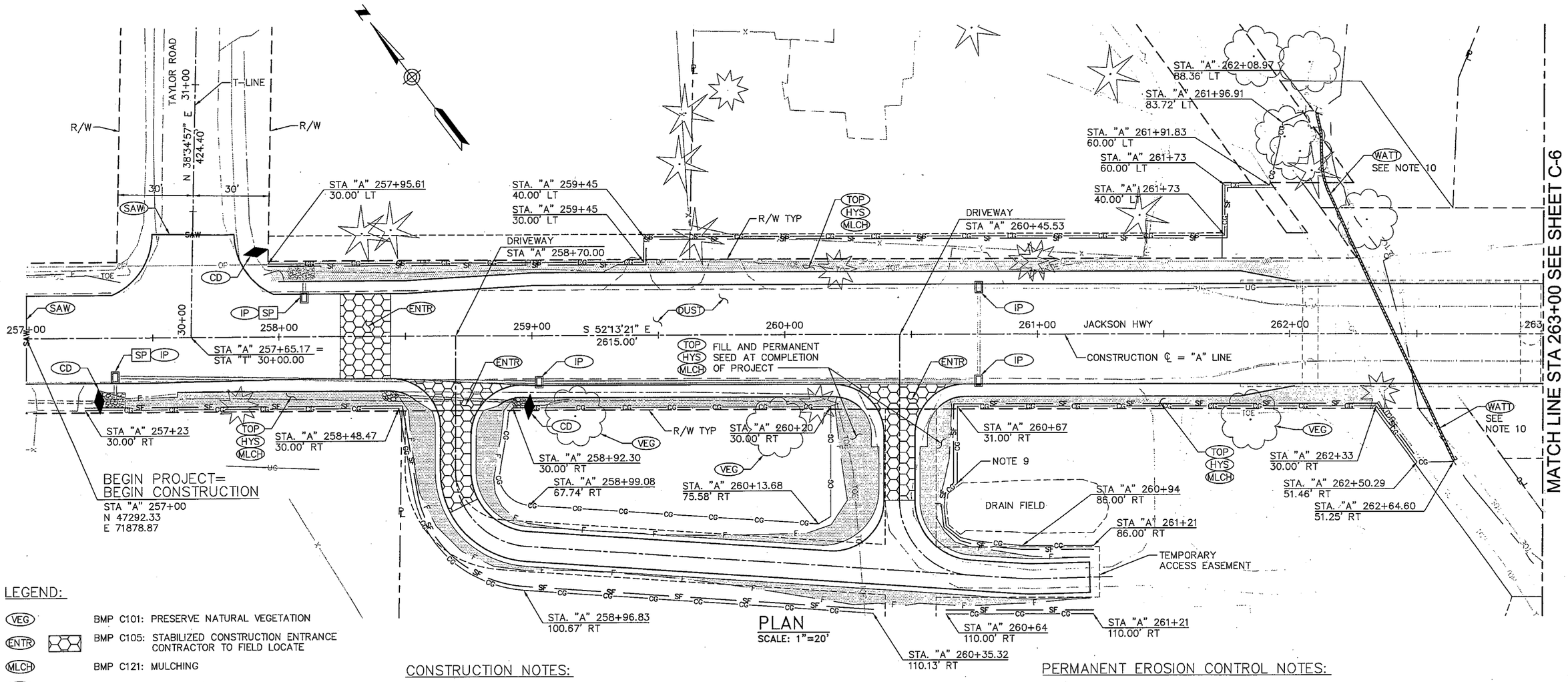

PLAN
SCALE: 1"=20'

LEGEND:

VEG	BMP C101: PRESERVE NATURAL VEGETATION
ENTR	BMP C105: STABILIZED CONSTRUCTION ENTRANCE CONTRACTOR TO FIELD LOCATE
MLCH	BMP C121: MULCHING
TOP	BMP C125: TOPSOILING
DUST	BMP C140: DUST CONTROL
SAW — SAW —	BMP C152: SAWCUTTING AND SURFACING POLLUTION PREVENTION
CD	BMP C207: CHECK DAM
IP	BMP C220: STORM DRAIN INLET PROTECTION
HYS	HYDROSEEDING – SEE DWG C–7 FOR REQUIREMENTS
WATT	WATTLES PER WSDOT STD. PLAN I–30.30–00
—— SF ——	BMP C233: SILT FENCE
——CG——	CLEARING AND GRUBBING LIMITS
SP	STORMWATER SAMPLING AND/OR INSPECTION LOCATION

CONSTRUCTION NOTES:

1. ALL BMP NUMBERS CORRESPOND TO THE DEPARTMENT OF ECOLOGY STORMWATER MANAGEMENT MANUAL FOR WESTERN WASHINGTON AND SHALL BE INSTALLED, MAINTAINED, AND REMOVED IN ACCORDANCE WITH SAID MANUAL.
2. CLEARING AND GRUBBING LIMIT SHALL BE TO ROW LIMIT AND/OR EASEMENT LIMITS, UNLESS NOTED OTHERWISE.
3. SILT FENCE SHALL BE PLACED 1 FOOT INSIDE CLEARING AND GRUBBING LIMIT, UNLESS NOTED OTHERWISE.
4. CONTRACTOR SHALL INSTALL STABILIZED CONSTRUCTION ENTRANCES AT ACCESS POINTS TO THE WORK AREAS OR AS DIRECTED BY THE ENGINEER.
5. STOCKPILE LOCATIONS SHALL BE AS DETERMINED BY THE CONTRACTOR.
6. CONTRACTOR SHALL MAINTAIN BMP C150 ON–SITE IN AN AREA EASILY ACCESSIBLE.
7. SAMPLING LOCATIONS TO BE FIELD LOCATED BY CERTIFIED EROSION AND SEDIMENT CONTROL LEAD.
8. SEE DWG C–7 FOR TESC NOTES AND DETAILS.
9. CONTRACTOR TO ADJUST CLEARING & GRUBBING AND SILT FENCE AS NECESSARY TO MISS DRAIN FIELD.
10. CONTRACTOR SHALL PLACE WATTLES ALONG EMBANKMENT AS NEEDED.

PERMANENT EROSION CONTROL NOTES:

1. TOPSOIL TYPE C SHALL BE PLACED TO A MIN. DEPTH OF 4 INCHES AND TO THE FINISHED GRADE IN ALL AREAS TO BE SEEDED AND THEN THE AREAS SHALL BE HYDROSEEDED.
2. USE BMP C130: SURFACE ROUGHENING, BMP C125: TOP SOILING, AND BMP C123: PLASTIC COVERING AS REQUIRED TO PREPARE EXPOSED SURFACE FOR FINAL SEEDING AS DIRECTED BY THE ENGINEER.
3. GRADE ANY DISTURBED AREAS BACK TO THEIR EXISTING CONDITION AND HYDROSEED THESE AREAS AS DIRECTED BY THE ENGINEER.

20 0 20 40
scale feet

AVOID CUTTING UNDERGROUND UTILITY LINES. IT'S COSTLY.
Call before you Dig
1-800-424-5555
UNDERGROUND SERVICE (USA)

NOTE:
EXISTING UTILITY LOCATIONS SHOWN HEREON ARE APPROXIMATE ONLY. IT SHALL BE THE CONTRACTOR'S RESPONSIBILITY TO DETERMINE THE EXACT VERTICAL AND HORIZONTAL LOCATION OF ALL EXISTING UNDER-GROUND AND OVERHEAD UTILITIES PRIOR TO COMMENCING CONSTRUCTION. NO REPRESENTATION IS MADE THAT ALL EXISTING UTILITIES ARE SHOWN HEREON. THE ENGINEER ASSUMES NO RESPONSIBILITY FOR UTILITIES NOT SHOWN OR UTILITIES NOT SHOWN IN THEIR PROPER LOCATION.

MARK	REVISION DESCRIPTION	BY	APP.	DATE

BergerABAM
33301 9th Avenue South, Suite 300
Federal Way, Washington 98003-2600
(206) 431-2300 Fax: (206) 431-2250

Lewis County Department of Public Works

CHARLES W. SPRY, STATE OF WASHINGTON, 21872, STRUCTURAL ENGINEER, PROFESSIONAL ENGINEER
11-16-09

LEWIS COUNTY DEPT. OF PUBLIC WORKS
ENGINEER DATE

DRAWN BY LWC
DESIGN BY LWC
CHECK BY SPT
PROJ MGR CWS

LEWIS COUNTY DEPARTMENT OF PUBLIC WORKS
NEWAUKUM BRIDGE NO. 20 REPLACEMENT PROJECT

TEMPORARY EROSION & SEDIMENT CONTROL (TESC) PLAN
SHEET 1

DRAWING NO. C-5
PROJECT NO. CRP 2072
FED AID NO. BRS-5667(002)
DATE: 12/15/09
SHEET NO. 6 OF 46

SE 1/4, SECT. 13, TOWNSHIP 13 N, RANGE 2 W, W.M.

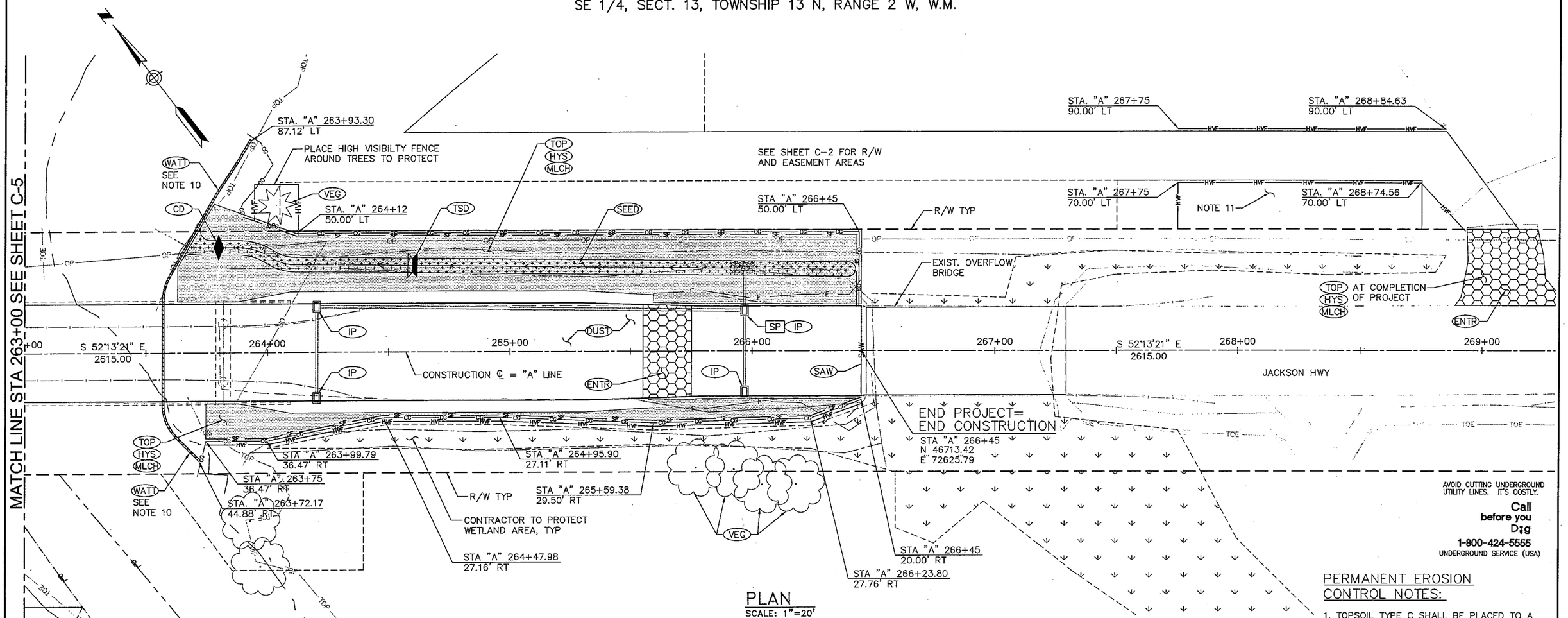

PLAN
SCALE: 1"=20'

AVOID CUTTING UNDERGROUND UTILITY LINES. IT'S COSTLY.

Call before you Dig
1-800-424-5555
UNDERGROUND SERVICE (USA)

LEGEND:

VEG		BMP C101: PRESERVE NATURAL VEGETATION
ENTR		BMP C105: STABILIZED CONSTRUCTION ENTRANCE CONTRACTOR TO FIELD LOCATE
MLCH		BMP C121: MULCHING
COVR		BMP C123: PLASTIC COVERING
TOP		BMP C125: TOPSOILING
DUST		BMP C140: DUST CONTROL
MATL		BMP C150: MATERIALS ON HAND (FIELD LOCATE)
SAW	— SAW —	BMP C152: SAWCUTTING AND SURFACING POLLUTION PREVENTION
MDEL		BMP C153: MATERIAL DELIVERY, STORAGE AND CONTAINMENT (FIELD LOCATE)
CD		BMP C207: CHECK DAM
TSD		BMP C208: TRIANGULAR SILT DIKE (GEOTEXTILE ENCASED CHECK DAM)
IP		BMP C220: STORM DRAIN INLET PROTECTION
HYS		HYDROSEEDING – SEE DWG C-7 FOR REQUIREMENTS
SEED		BIOSWALE SEED MIX – SEE DWG C-7 FOR REQUIREMENTS
WATT		WATTLES PER WSDOT STD. PLAN I-30.30-00
	—HVF—	BMP C103: HIGH VISIBILITY FENCE
	— SF —	BMP C233: SILT FENCE
	—CG—	CLEARING AND GRUBBING LIMITS
	SP	STORMWATER SAMPLING AND/OR INSPECTION LOCATION
		WETLAND

CONSTRUCTION NOTES:

1. ALL BMP NUMBERS CORRESPOND TO THE DEPARTMENT OF ECOLOGY STORMWATER MANAGEMENT MANUAL FOR WESTERN WASHINGTON AND SHALL BE INSTALLED, MAINTAINED, AND REMOVED IN ACCORDANCE WITH SAID MANUAL.
2. CLEARING AND GRUBBING LIMIT SHALL BE TO ROW LIMIT AND/OR EASEMENT LIMITS, UNLESS NOTED OTHERWISE.
3. SILT FENCE SHALL BE PLACED 1 FOOT INSIDE CLEARING AND GRUBBING LIMIT, UNLESS NOTED OTHERWISE.
4. CONTRACTOR SHALL INSTALL STABILIZED CONSTRUCTION ENTRANCES AT ACCESS POINTS TO THE WORK AREAS AS DIRECTED BY THE ENGINEER.
5. STOCKPILE LOCATIONS SHALL BE AS DETERMINED BY THE CONTRACTOR.
6. CONTRACTOR SHALL MAINTAIN BMP C150 ON-SITE IN AN AREA EASILY ACCESSIBLE.
7. SAMPLING LOCATIONS TO BE FIELD LOCATED BY CERTIFIED EROSION AND SEDIMENT CONTROL LEAD.
8. SEE DWG C-7 FOR TESC NOTES AND DETAILS.
9. ALL ACCESS ROADS SHALL BE MAINTAINED AND RESTORED BY THE CONTRACTOR.
10. CONTRACTOR SHALL PLACE WATTLES ALONG EMBANKMENT AS NEEDED.
11. CONTRACTOR TO PROTECT ARCHAEOLOGICAL AREA.

20 0 20 40
scale feet

PERMANENT EROSION CONTROL NOTES:

1. TOPSOIL TYPE C SHALL BE PLACED TO A MIN. DEPTH OF 4 INCHES AND TO THE FINISHED GRADE IN ALL AREAS TO BE SEEDED AND THEN THE AREAS SHALL BE HYDROSEEDED.
2. USE BMP C130: SURFACE ROUGHENING, BMP C125: TOP SOILING, AND BMP C123: PLASTIC COVERING AS REQUIRED TO PREPARE EXPOSED SURFACE FOR FINAL SEEDING AS DIRECTED BY THE ENGINEER.
3. GRADE ANY DISTURBED AREAS BACK TO THEIR EXISTING CONDITION AND HYDROSEED THESE AREAS AS DIRECTED BY THE ENGINEER.

NOTE:

EXISTING UTILITY LOCATIONS SHOWN HEREON ARE APPROXIMATE ONLY. IT SHALL BE THE CONTRACTOR'S RESPONSIBILITY TO DETERMINE THE EXACT VERTICAL AND HORIZONTAL LOCATION OF ALL EXISTING UNDER-GROUND AND OVERHEAD UTILITIES PRIOR TO COMMENCING CONSTRUCTION. NO REPRESENTATION IS MADE THAT ALL EXISTING UTILITIES ARE SHOWN HEREON. THE ENGINEER ASSUMES NO RESPONSIBILITY FOR UTILITIES NOT SHOWN OR UTILITIES NOT SHOWN IN THEIR PROPER LOCATION.

MARK	REVISION DESCRIPTION	BY	APP.	DATE

BergerABAM
33301 9th Avenue South, Suite 300
Federal Way, Washington 98003-2600
(206) 431-2300 Fax: (206) 431-2250

Lewis County Department of Public Works

CHARLES W. SPRY, STATE OF WASHINGTON, 21872, PROFESSIONAL ENGINEER
12-16-09

LEWIS COUNTY DEPT. OF PUBLIC WORKS
ENGINEER DATE

DRAWN BY LWC
DESIGN BY LWC
CHECK BY SPT
PROJ MGR CWS

LEWIS COUNTY DEPARTMENT OF PUBLIC WORKS
NEWAUKUM BRIDGE NO. 20 REPLACEMENT PROJECT

TEMPORARY EROSION & SEDIMENT CONTROL (TESC) PLAN
SHEET 2

DRAWING NO. C-6
PROJECT NO. CRP 2072
FED AID NO. BRS-5667(002)
DATE: 12/15/09
SHEET NO. 7 OF 46

BIOSWALE SEED MIX:

SEED SHALL BE APPLIED AT THE RATE OF 120 POUNDS PER ACRE IN THE FOLLOWING PROPORTIONS:

SPECIES	% BY WEIGHT	% BY PURE SEED	MINIMUM GERMINATION
TALL OR MEADOW RESCUE (FESTUCA ARUNDINACEA OR FESTUCA ELATIOR)	75–85	98	90
SEASIDE/CREEPING BENTGRASS (ARGOSTIS PALUSTRIS)	10–15	92	85
REDTOP BENTGRASS (ARGOSTIS ALBA OR ARGOSTIS GIGANTEA)	5–10	90	80

HYDROSEEDING:

1. CONTRACTOR SHALL ALSO ADD 50 POUNDS PER ACRE OF REGREEN TO THE BIOSWALE SEED MIX. THE COMBINED SEED MIXTURE SHALL BE APPLIED AT A RATE OF 170 POUNDS PER ACRE.
2. SEE SPECIAL PROVISIONS FOR SEED MIX.

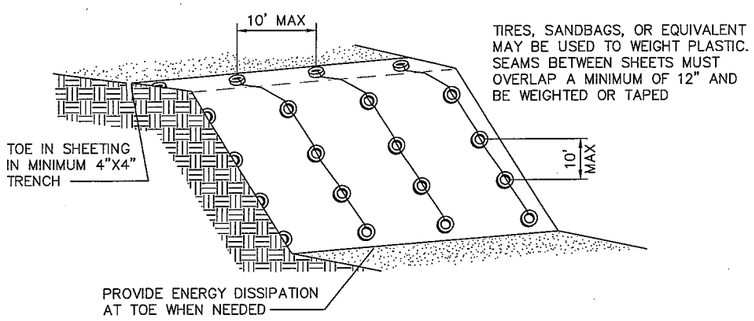

EROSION CONTROL – PLASTIC SHEETING

SCALE: N.T.S.

TEMPORARY EROSION AND SEDIMENT CONTROL (TESC) PLAN REQUIREMENTS	BEST MANAGEMENT PRACTICES - BMP'S (AS REQUIRED)
ELEMENT #1: DELINEATE CLEARING AND GRADING LIMITS	PRESERVE NATURAL VEGETATION; BUFFER ZONES; HIGH VISIBILITY FENCE; STAKE AND WIRE FENCE
ELEMENT #2: ESTABLISH CONSTRUCTION ACCESS	STABILIZED CONSTRUCTION ENTRANCE, WHEEL WASH, CONSTRUCTION ROAD/PARKING AREA STABILIZATION
ELEMENT #3: CONTROL FLOW RATES	SEDIMENT TRAP; CHECK DAMS; INTERCEPTOR DIKE & SWALE
ELEMENT #4: INSTALL SEDIMENT CONTROLS	GRAVEL FILTER BERM; COMPOST BERM; SILT FENCE; VEGETATED STRIP; COMPOST WATTLES; SEDIMENT TRAP.
ELEMENT #5: STABILIZE SOILS	TEMPORARY & PERMANENT SEEDING; STRAW AND WOOD CHIP MULCHING; EROSION CONTROL BLANKETS; MATTING AND NETS
ELEMENT #6: PROTECT SLOPES	TEMPORARY & PERMANENT SEEDING; PRESERVE VEGETATION; PHASED GRADING; SURFACE ROUGHENING; EROSION CONTROL BLANKETS; MATTING & NETS; PLASTIC COVERING; INTERCEPTOR DIKE & SWALE; GRASS LINED CHANNELS; SUBSURFACE DRAINS; CHECK DAMS; TRIANGULAR SILT DIKE
ELEMENT #7: PROTECT DRAIN INLETS	STORMDRAIN INLET PROTECTION; INTERCEPTOR DIKE & SWALE
ELEMENT #8: STABILIZE CHANNELS AND OUTLETS	CHANNEL LINING; OUTLET PROTECTION; EROSION CONTROL BLANKETS; MATTING & NETS; SODDING AND/OR PERMANENT SEEDING
ELEMENT #9: CONTROL POLLUTANTS	CONCRETE HANDLING; SAWCUTTING AND SURFACE POLLUTION PREVENTION; FUGITIVE DUST CONTROL
ELEMENT #10: CONTROL DE-WATERING	SEDIMENT TRAP; SEDIMENT BAG; SANITARY SEWER DISCHARGE W/ CITY APPROVAL; TRANSPORT OFF SITE; VEGETATED FILTER STRIP; INFILTRATION; CONTROLLED DISCHARGE
ELEMENT #11: MAINTAIN BMP'S	INSPECT, REPAIR, AND MAINTAIN AS NEEDED TO KEEP IN GOOD WORKING ORDER THROUGHOUT CONSTRUCTION. REPLACE AS NEEDED OR AS DIRECTED BY THE ENGINEER. MAINTENANCE RECORDS SHALL BE KEPT BY THE CONTRACTOR PER PROJECT SPECIFICATIONS.
ELEMENT #12: MANAGE THE PROJECT	PHASE CONSTRUCTION; SEASONAL WORK LIMITATIONS; COORDINATION WITH UTILITIES AND OTHER CONTRACTORS; INSPECTION AND MONITORING

EROSION AND SEDIMENT CONTROL NOTES:

1. APPROVAL OF THIS TESC PLAN DOES NOT CONSTITUTE AN APPROVAL OF PERMANENT ROAD OR DRAINAGE DESIGN (E.G., SIZE AND LOCATION OF ROADS, PIPES, RESTRICTIONS, CHANNELS, RETENTION FACILITIES, UTILITIES, ETC.).
2. THE IMPLEMENTATION OF THE TESC PLAN AND THE CONSTRUCTION, MAINTENANCE, REPLACEMENT, AND UPGRADING OF THESE BMP FACILITIES IS THE RESPONSIBILITY OF THE CONTRACTOR UNTIL ALL CONSTRUCTION IS APPROVED.
3. THE BOUNDARIES OF THE CLEARING LIMITS SHOWN ON THESE PLANS SHALL BE CLEARLY FLAGGED BY A CONTINUOUS LENGTH OF SURVEY TAPE (OR FENCING IF REQUIRED) PRIOR TO CONSTRUCTION AND DURING THE CONSTRUCTION PERIOD. NO DISTURBANCE BEYOND THE CLEARING LIMITS SHALL BE PERMITTED. THE CLEARING LIMITS SHALL BE MAINTAINED BY THE CONTRACTOR FOR THE DURATION OF CONSTRUCTION.
4. THE BMP FACILITIES SHOWN ON THESE PLANS MUST BE CONSTRUCTED PRIOR TO OR IN CONJUNCTION WITH ALL CLEARING AND GRADING SO AS TO ENSURE THAT THE TRANSPORT OF SEDIMENT TO SURFACE WATERS, DRAINAGE SYSTEMS, AND ADJACENT PROPERTIES IS MINIMIZED.
5. THE BMP FACILITIES SHOWN ON THESE PLANS ARE THE MINIMUM REQUIREMENTS FOR ANTICIPATED SITE CONDITIONS. DURING THE CONSTRUCTION PERIOD, THESE BMP FACILITIES SHALL BE UPGRADED AS NEEDED FOR UNEXPECTED STORM EVENTS AND MODIFIED TO ACCOUNT FOR CHANGING SITE CONDITIONS (E.G., ADDITIONAL SUMP PUMPS, RELOCATION OF DITCHES AND SILT FENCES, ETC.).
6. THE BMP FACILITIES SHALL BE INSPECTED DAILY BY THE CONTRACTOR AND MAINTAINED TO ENSURE CONTINUED PROPER FUNCTIONING. WRITTEN RECORDS SHALL BE KEPT OF WEEKLY REVIEWS OF THE BMP FACILITIES DURING THE WET SEASON (OCT. 1 TO APRIL 30) AND OF MONTHLY REVIEWS DURING THE DRY SEASON (MAY 1 TO SEPT. 30).
7. ANY AREAS OF EXPOSED SOILS, INCLUDING ROADWAY EMBANKMENTS, THAT WILL NOT BE DISTURBED FOR TWO DAYS DURING THE WET SEASON OR SEVEN DAYS DURING THE DRY SEASON SHALL BE IMMEDIATELY STABILIZED WITH THE APPROVED BMP METHODS (E.G., SEEDING, MULCHING, PLASTIC COVERING, ETC.).
8. ANY AREA NEEDING BMP MEASURES NOT REQUIRING IMMEDIATE ATTENTION SHALL BE ADDRESSED WITHIN FIFTEEN (15) DAYS.
9. THE BMP FACILITIES ON INACTIVE SITES SHALL BE INSPECTED AND MAINTAINED A MIN. OF ONCE PER MONTH OR WITHIN FORTY-EIGHT (48) HOURS FOLLOWING A STORM.
10. AT NO TIME SHALL MORE THAN SIX (6) INCHES OF SEDIMENT BE ALLOWED TO ACCUMULATE WITHIN A CATCH BASIN. ALL CATCH BASINS AND CONVEYANCE PIPING SHALL BE CLEANED PRIOR TO PAVING. THE CLEANING OPERATION SHALL NOT FLUSH SEDIMENT-LADEN WATER INTO THE DOWNSTREAM SYSTEM.
11. STABILIZED CONSTRUCTION ENTRANCES AND ROADS SHALL BE INSTALLED AT THE BEGINNING OF CONSTRUCTION AND MAINTAINED FOR THE DURATION OF THE PROJECT. ADDITIONAL MEASURES, SUCH AS WASH PADS, MAY BE REQUIRED TO ENSURE THAT ALL PAVED AREAS ARE KEPT CLEAN FOR THE DURATION OF THE PROJECT.
12. ANY PERMANENT FLOW CONTROL FACILITY USED AS A TEMPORARY SETTLING BASIN SHALL BE MODIFIED WITH THE NECESSARY EROSION CONTROL MEASURES AND SHALL PROVIDE ADEQUATE STORAGE CAPACITY. IF THE FACILITY IS TO FUNCTION ULTIMATELY AS AN INFILTRATION SYSTEM, THE TEMPORARY FACILITY MUST BE GRADED SO THAT THE BOTTOM AND SIDES ARE AT LEAST THREE FEET ABOVE THE FINAL GRADE OF THE PERMANENT FACILITY.
13. WHERE STRAW MULCH FOR TEMPORARY EROSION CONTROL IS REQUIRED, IT SHALL BE APPLIED AT A MINIMUM THICKNESS OF 3 INCHES.
14. PRIOR TO THE BEGINNING OF THE WET SEASON (OCT. 1), ALL DISTURBED AREAS SHALL BE SEEDED AND/OR COVERED IN PREPARATION FOR THE WINTER RAINS.
15. REMOVE ALL TEMPORARY EROSION AND SEDIMENT CONTROL MEASURES UPON COMPLETION OF PROJECT.
16. CONTRACTOR IS RESPONSIBLE FOR RECORDING 24-HOUR EVENT RECORDS IN ACCORDANCE WITH THE STORMWATER POLLUTION PREVENTION PLAN (SWPPP).

MARK	REVISION DESCRIPTION	BY	APP.	DATE

BergerABAM
33301 9th Avenue South, Suite 300
Federal Way, Washington 98003-2600
(206) 431-2300 Fax: (206) 431-2250

Lewis County Department of Public Works

CHARLES W. SPAY STATE OF WASHINGTON 21872 STRUCTURAL ENGINEER PROFESSIONAL ENGINEER 12-16-09

LEWIS COUNTY DEPT. OF PUBLIC WORKS
ENGINEER DATE

DRAWN BY RGP
DESIGN BY RGP
CHECK BY SPT
PROJ MGR CWS

LEWIS COUNTY DEPARTMENT OF PUBLIC WORKS
NEWAUKUM BRIDGE NO. 20 REPLACEMENT PROJECT

TEMPORARY EROSION & SEDIMENT CONTROL NOTES AND DETAILS

DRAWING NO. C-7
PROJECT NO. CRP 2072
FED AID NO. BRS-5667(002)
DATE: 12/15/09
SHEET NO. 8 OF 46

SECT. 13, TOWNSHIP 13 N, RANGE 2 W, W.M.

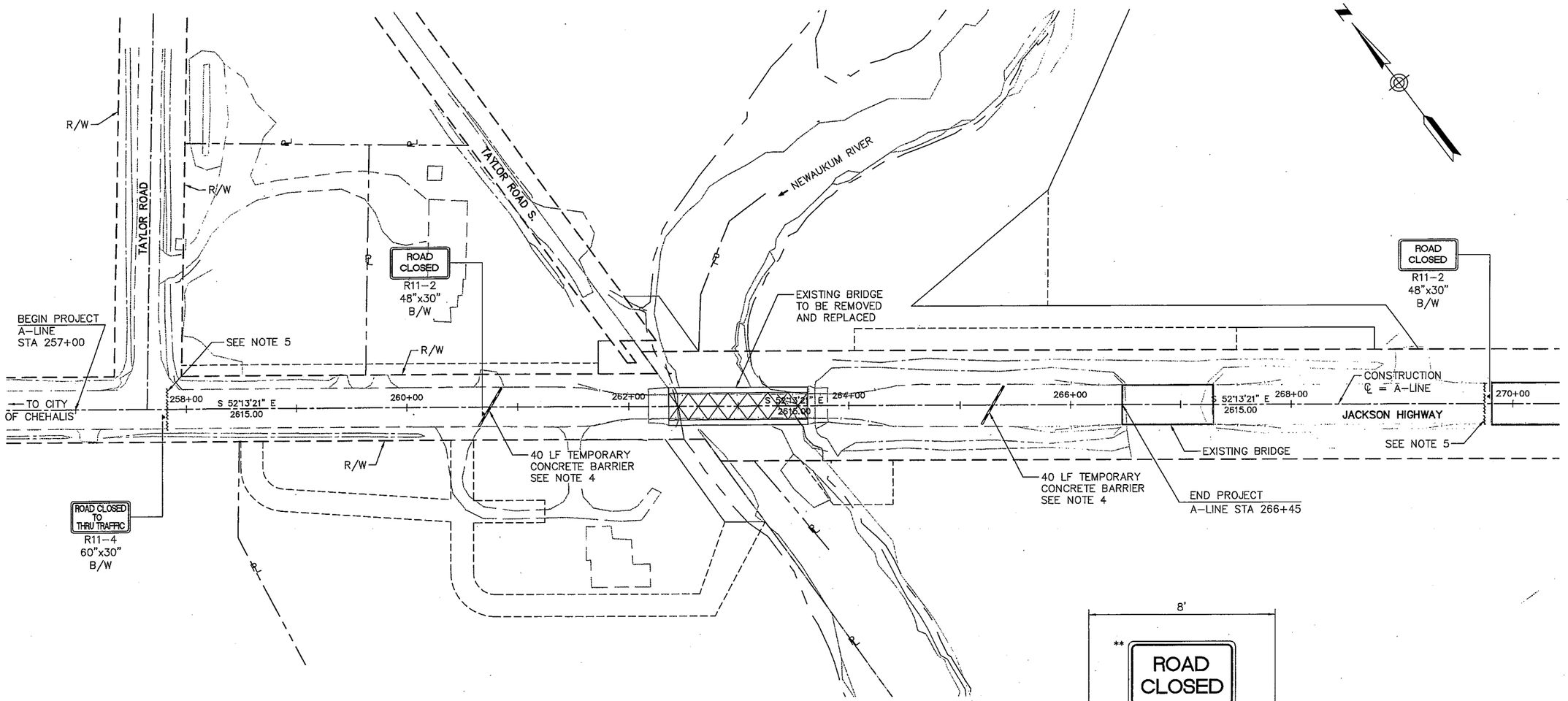

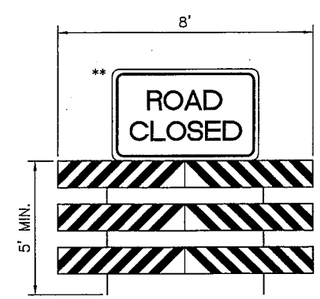

TYPE III BARRICADE, TYP

** SEE PLAN FOR APPROPRIATE SIGN TO BE MOUNTED ON TYPE III BARRICADE

BARRICADE DETAIL (TYP)

SCALE: NTS

LEGEND:

- EXIST. RIGHT-OF-WAY LINE (R/W)
- ROADWAY CENTERLINE
- TYPE III BARRICADE
- TEMPORARY CONCRETE BARRIER

GENERAL NOTES

1. PAVEMENT MARKINGS NO LONGER APPLICABLE SHALL BE REMOVED AS SOON AS PRACTICABLE.
2. TEMPORARY BARRIERS AND END TREATMENTS SHALL BE CRASHWORTHY.
3. DETOUR ROAD LOCATION AND SIGNS FOR AREA TRAFFIC WILL BE SUPPLIED BY THE LEWIS COUNTY DEPARTMENT OF PUBLIC WORKS.
4. CONTRACTOR TO FIELD LOCATE TEMPORARY CONCRETE BARRIER.
5. CONTRACTOR TO FIELD LOCATE FOUR (4) TYPE III BARRICADES. ONE SHALL HAVE R11-2 OR R11-4 SIGN MOUNTED ON IT.

50 0 50 100
scale feet

AVOID CUTTING UNDERGROUND UTILITY LINES. IT'S COSTLY.

Call before you Dig
1-800-424-5555
UNDERGROUND SERVICE (USA)

NOTE:

EXISTING UTILITY LOCATIONS SHOWN HEREON ARE APPROXIMATE ONLY. IT SHALL BE THE CONTRACTOR'S RESPONSIBILITY TO DETERMINE THE EXACT VERTICAL AND HORIZONTAL LOCATION OF ALL EXISTING UNDER-GROUND AND OVERHEAD UTILITIES PRIOR TO COMMENCING CONSTRUCTION. NO REPRESENTATION IS MADE THAT ALL EXISTING UTILITIES ARE SHOWN HEREON. THE ENGINEER ASSUMES NO RESPONSIBILITY FOR UTILITIES NOT SHOWN OR UTILITIES NOT SHOWN IN THEIR PROPER LOCATION.

MARK	REVISION DESCRIPTION	BY	APP.	DATE

BergerABAM
33301 9th Avenue South, Suite 300
Federal Way, Washington 98003-2600
(206) 431-2300 Fax: (206) 431-2250

Lewis County Department of Public Works

CHARLES W. SPAY, STATE OF WASHINGTON, 21872, STRUCTURAL ENGINEER, PROFESSIONAL ENGINEER, 12-16-09

LEWIS COUNTY DEPT. OF PUBLIC WORKS

ENGINEER DATE

DRAWN BY RGP
DESIGN BY RGP
CHECK BY SPT
PROJ MGR CWS

LEWIS COUNTY DEPARTMENT OF PUBLIC WORKS

NEWAUKUM BRIDGE NO. 20 REPLACEMENT PROJECT

CONSTRUCTION SIGNS

DRAWING NO. C-8
PROJECT NO. CRP 2072
FED AID NO. BRS-5667(002)
DATE: 12/15/09
SHEET NO. 9 OF 46

Last Saved on Tue Dec 15 2009 at 01:50PM by Bauer File Name: P:\Fedaw\Wwl3005\FEDAW-05-140\PLAN\dwgs\C-08.dwg Scale: 1

CONSTRUCTION NOTES:

1. SHOULDER
   STA. "A" 257+00 TO 258+00 – 6'
   STA. "A" 265+60 TO 265+80 – 7.4' TO 7'
   STA. "A" 265+80 TO 266+45 – 7'
2. LANE
   STA. "A" 257+00 TO 258+00 – 11'
   STA. "A" 265+60 TO 265+80 – 11.4' TO 11'
   STA. "A" 265+80 TO 266+45 – 11'
3. SHOULDER
   STA. "A" 258+00 TO 258+50 – 6'
   STA. "A" 258+50 TO 259+00 – 6' TO 8'
   STA. "A" 259+00 TO 261+80.5 – 8'
   STA. "A" 264+09.5 TO 265+30 – 8'
   STA. "A" 265+30 TO 265+60 – 8' TO 7.4'
4. LANE
   STA. "A" 258+00 TO 258+50 – 11'
   STA. "A" 258+50 TO 259+00 – 11' TO 12'
   STA. "A" 259+00 TO 261+80.5 – 12'
   STA. "A" 264+09.5 TO 265+30 – 12'
   STA. "A" 265+30 TO 265+60 – 12' TO 11.4'
5. LANE
   STA. "A" 258+00 TO 258+50 – 11'
   STA. "A" 258+50 TO 259+00 – 11' TO 12'
   STA. "A" 259+00 TO 261+80.5 – 12'
   STA. "A" 264+09.5 TO 265+30 – 12'
   STA. "A" 265+30 TO 265+60 – 12' TO 11.4'
6. SHOULDER
   STA. "A" 258+00 TO 258+50 – 6'
   STA. "A" 258+50 TO 259+00 – 6' TO 8'
   STA. "A" 259+00 TO 261+80.5 – 8'
   STA. "A" 264+09.5 TO 265+30 – 8'
   STA. "A" 265+30 TO 265+60 – 8' TO 7.4'
7. EMBANKMENT
   STA. "A" 261+80.5 TO 262+02 – 5' TO 1'
   STA. "A" 263+88 TO 264+09.5 – 1' TO 5'

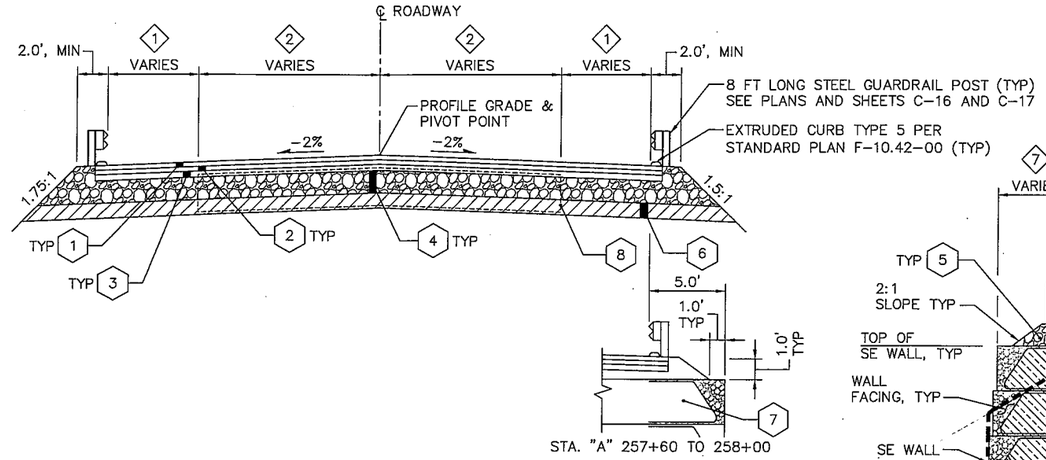

A – JACKSON HIGHWAY – ROADWAY SECTION

SCALE: NTS
STA. "A" 257+00 TO 258+00
STA. "A" 265+60 TO 266+45

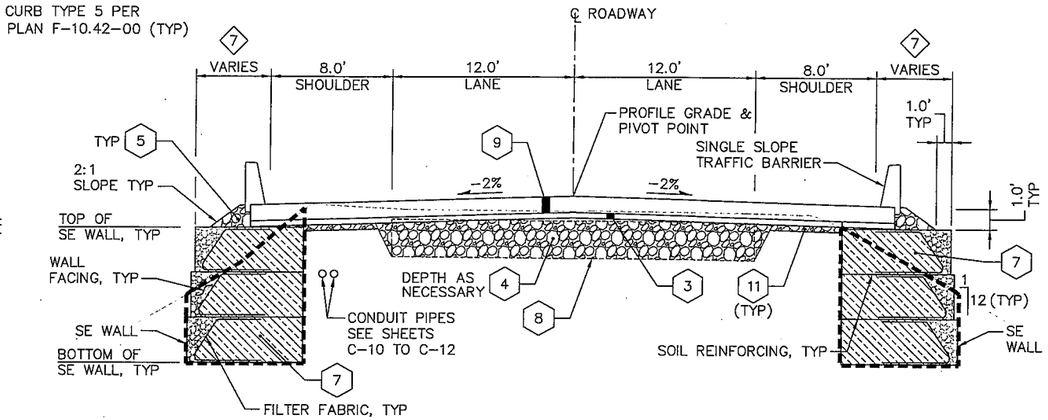

C – JACKSON HIGHWAY – BRIDGE APPROACH

SCALE: NTS
STA. "A" 261+80.5 TO 262+05.5
STA. "A" 263+84.5 TO 264+09.5

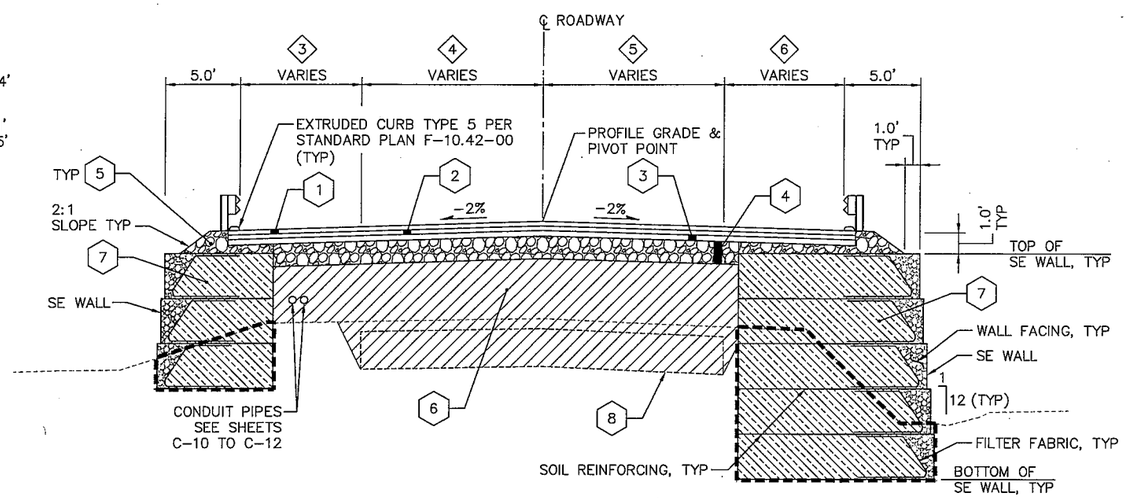

B – JACKSON HIGHWAY – ROADWAY SECTION

SCALE: NTS
STA. "A" 258+00 TO 261+80.5
STA. "A" 264+09.5 TO 265+60

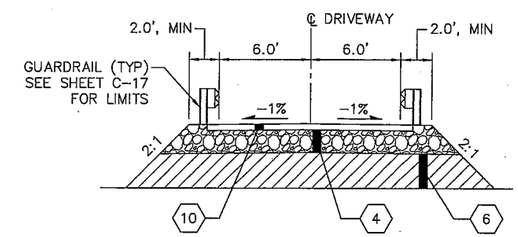

D – HMA DRIVEWAY SECTION

SCALE: NTS
STA. "C" 10+20 TO 10+42
STA. "D" 20+20 TO 20+42

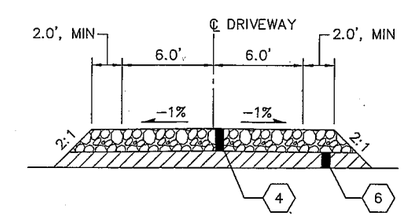

E – GRAVEL DRIVEWAY SECTION

SCALE: NTS
STA. "C 10+42 TO 12+75.29
STA. "D" 20+42 TO 21+59

NOTE: GRAVEL BORROW WILL NOT BE NEEDED WHERE DRIVEWAY TIES IN TO EXISTING GROUND.

LEGEND:

NOTE: ALL DEPTHS SHOWN ARE COMPACTED DEPTH.

1. 0.20' MIN. HMA CL. 1/2" PG 64–22 (WEARING)
2. 0.20' MIN. HMA CL. 1/2" PG 64–22 (LEVELING)
3. 0.25' MIN. CRUSHED SURFACING TOP COURSE
4. 1.00' MIN. CRUSHED SURFACING BASE COURSE – MIN. 2 LIFTS
5. CRUSHED SURFACING TOP COURSE – AS NEEDED (0.40' MIN.) (SHOULDER FINISHING)
6. GRAVEL BORROW – AS NEEDED
7. BACKFILL FOR STRUCTURAL EARTH WALL
8. EXISTING CONCRETE PANELS – CONTRACTOR TO REMOVE
9. 1.083' CONCRETE APPROACH SLAB
10. 0.33' HMA CL. 1/2" PG 64–22 FOR APPROACH
11. CRUSHED SURFACING BASE COURSE – 0.25' MIN.

--- STRUCTURE EXCAVATION CLASS B

NOTES:

1. NORMAL CROWN SECTION SHOWN.
2. N.S.T. = NOT STEEPER THAN.
3. PLANNING DEPTH SHALL BE 0.15' MIN.

MARK	REVISION DESCRIPTION	BY	APP.	DATE

BergerABAM
33301 9th Avenue South, Suite 300
Federal Way, Washington 98003-2600
(206) 431-2300 Fax: (206) 431-2250

Lewis County Department of Public Works

CHARLES W. SPAY, STATE OF WASHINGTON, 21872, STRUCTURAL ENGINEER, PROFESSIONAL ENGINEER
12-16-09

LEWIS COUNTY DEPT. OF PUBLIC WORKS
ENGINEER DATE

DRAWN BY LWC
DESIGN BY JCR
CHECK BY SPT
PROJ MGR CWS

LEWIS COUNTY DEPARTMENT OF PUBLIC WORKS
NEWAUKUM BRIDGE NO. 20 REPLACEMENT PROJECT

ROADWAY SECTIONS

DRAWING NO. C-9
PROJECT NO. CRP 2072
FED AID NO. BRS-5667(002)
DATE: 12/15/09
SHEET NO. 10 OF 46

SE 1/4, SECT. 13, TOWNSHIP 13 N, RANGE 2 W, W.M.

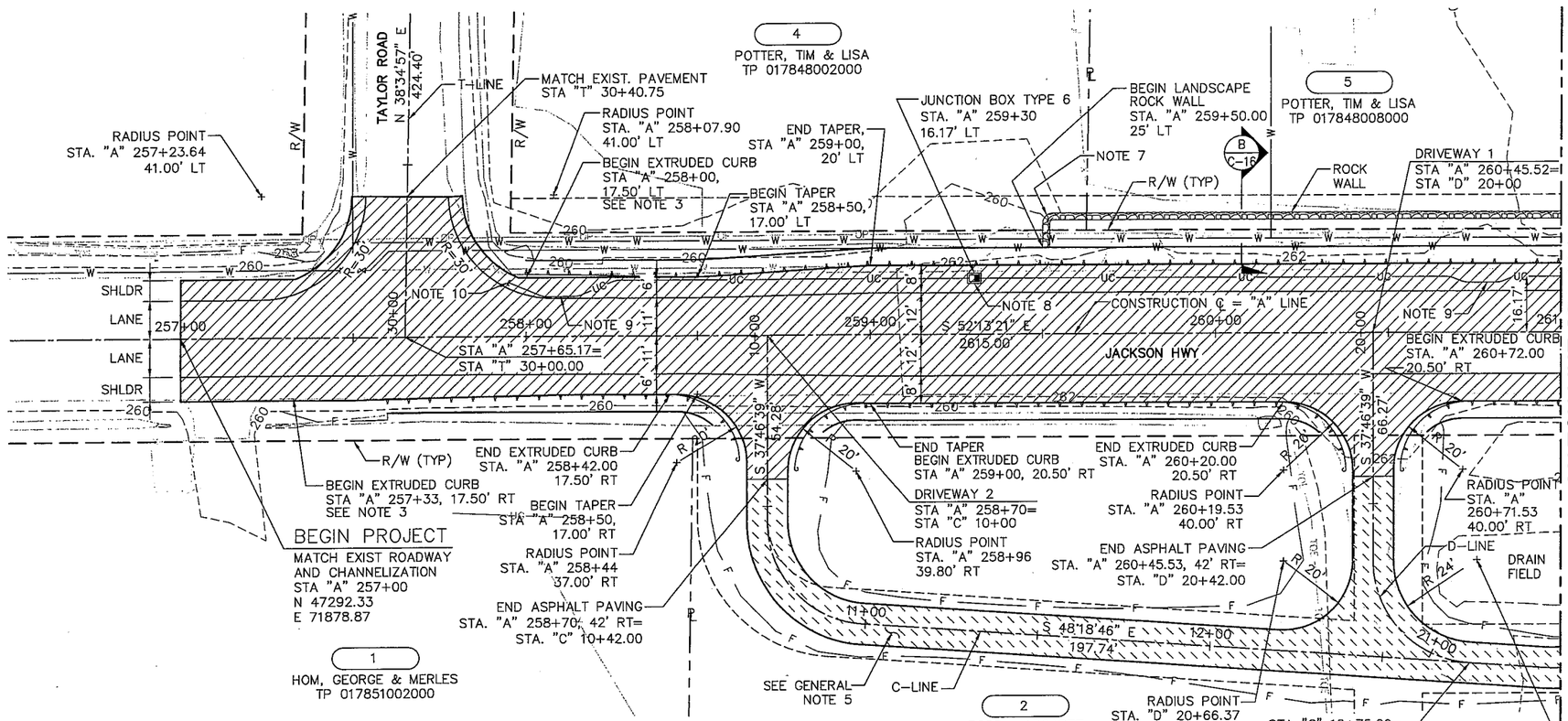

PLAN
SCALE: 1"=20'

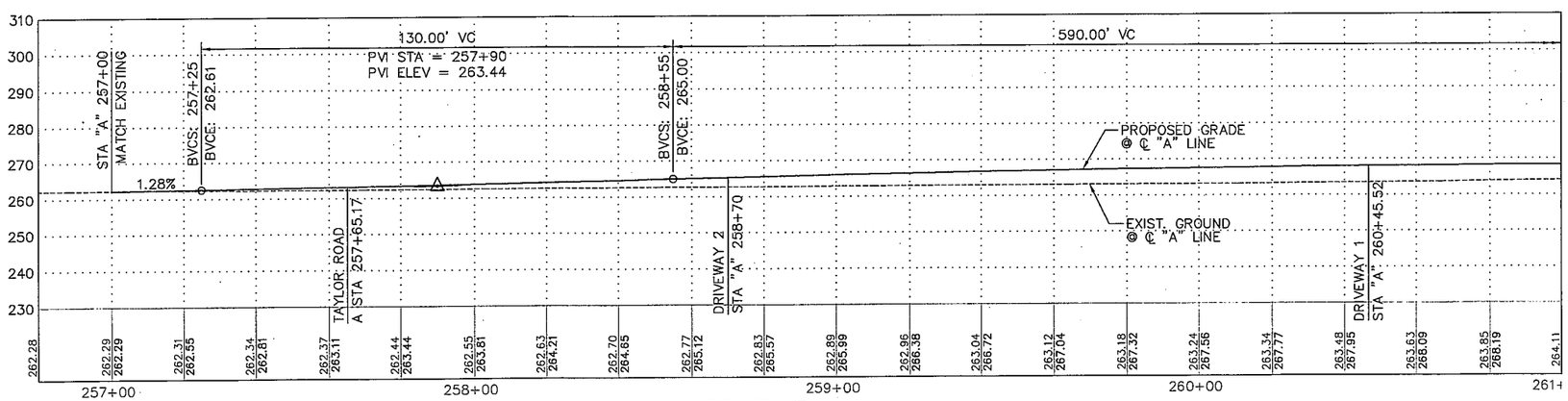

PROFILE
SCALE: 1"=20'

GENERAL NOTES:

1. BEAM GUARDRAIL, SEE SHT C-17 FOR LAYOUT
2. TYP CHANNELIZATION, SEE DETAIL 1 SHT C-11
3. ALL CURB OFFSETS SHALL BE MEASURED TO FACE OF CURB.
4. HATCHING FOR EASEMENTS NOT SHOWN FOR CLARITY. REFER TO SHEET C-2 FOR EASEMENTS.
5. CONTRACTOR TO CONSTRUCT DRIVEWAYS TO ALLOW HOMEOWNER ACCESS TO JACKSON HIGHWAY AT ALL TIMES. SEE SHT C-16 FOR DRIVEWAY PROFILES.
6. A NEW WATER LINE WAS CONSTRUCTED UNDER NEWAUKUM RIVER BY DIRECTIONAL BORING. THE CONTRACTOR SHALL VERIFY THE LOCATION AND ELEVATION OF ALL UNDERGROUND UTILITIES, INCLUDING WATER AND GAS LINES.
7. CONTRACTOR TO WRAP LANDSCAPE ROCK WALL TO SE WALL.
8. PLACE TWO 4-INCH DIAM. CONDUIT PIPES TO HEAVY DUTY JUNCTION BOX TYPE 6 PER WSDOT STD. PLAN J-11b. ALL EXCAVATION, BEDDING, BACKFILL, AND JUNCTION BOXES SHALL BE INCIDENTAL TO THE COST OF THE CONDUIT PIPE. SEE DETAIL ON SHEET C-16.
9. BENDS SHALL BE VIA SWEEPS AND SHALL BE USED AS NECESSARY TO HAVE SUFFICIENT CLEARANCE BETWEEN THE CONDUIT PIPE AND THE DRAINAGE STRUCTURES, AS APPROVED BY THE ENGINEER.
10. BEGIN CONDUIT PIPES AT STA. "A" 257+95.00, 16.17' LT. INSTALL SWEEP 90° ELBOWS AND CAP ENDS OF CONDUIT PIPES FOR FUTURE USE, AS DIRECTED BY THE ENGINEER.

LEGEND:

NEW ASPHALT PAVING

NEW GRAVEL DRIVEWAY

C-LINE CURVE DATA				
PI STATION	RADIUS	LENGTH	TANGENT	DELTA
10+76.81	30.00	45.08	28.02	86°05'25"

D-LINE CURVE DATA				
PI STATION	RADIUS	LENGTH	TANGENT	DELTA
20+94.29	30.00	45.08	28.02	86°05'25"
21+34.58	30.00	2.85	1.43	5°26'55"

20 0 20 40
scale feet

AVOID CUTTING UNDERGROUND UTILITY LINES. IT'S COSTLY.

Call before you Dig
1-800-424-5555
UNDERGROUND SERVICE (USA)

NOTE:

EXISTING UTILITY LOCATIONS SHOWN HEREON ARE APPROXIMATE ONLY. IT SHALL BE THE CONTRACTOR'S RESPONSIBILITY TO DETERMINE THE EXACT VERTICAL AND HORIZONTAL LOCATION OF ALL EXISTING UNDER-GROUND AND OVERHEAD UTILITIES PRIOR TO COMMENCING CONSTRUCTION. NO REPRESENTATION IS MADE THAT ALL EXISTING UTILITIES ARE SHOWN HEREON. THE ENGINEER ASSUMES NO RESPONSIBILITY FOR UTILITIES NOT SHOWN OR UTILITIES NOT SHOWN IN THEIR PROPER LOCATION.

MARK	REVISION DESCRIPTION	BY	APP.	DATE

BergerABAM
33301 9th Avenue South, Suite 300
Federal Way, Washington 98003-2600
(206) 431-2300 Fax: (206) 431-2250

Lewis County Department of Public Works

CHARLES W. SPRAY, STATE OF WASHINGTON, 21872, STRUCTURAL ENGINEER, PROFESSIONAL ENGINEER
12-16-09

LEWIS COUNTY DEPT. OF PUBLIC WORKS
ENGINEER DATE

DRAWN BY JCR
DESIGN BY JCR
CHECK BY SPT
PROJ MGR CWS

LEWIS COUNTY DEPARTMENT OF PUBLIC WORKS
NEWAUKUM BRIDGE NO. 20 REPLACEMENT PROJECT

ROADWAY PLAN & PROFILE
SHEET 1

DRAWING NO. C-10
PROJECT NO. CRP 2072
FED AID NO. BRS-5667(002)
DATE: 12/15/09
SHEET NO. 11 OF 46

SE 1/4, SECT. 13, TOWNSHIP 13 N, RANGE 2 W, W.M.

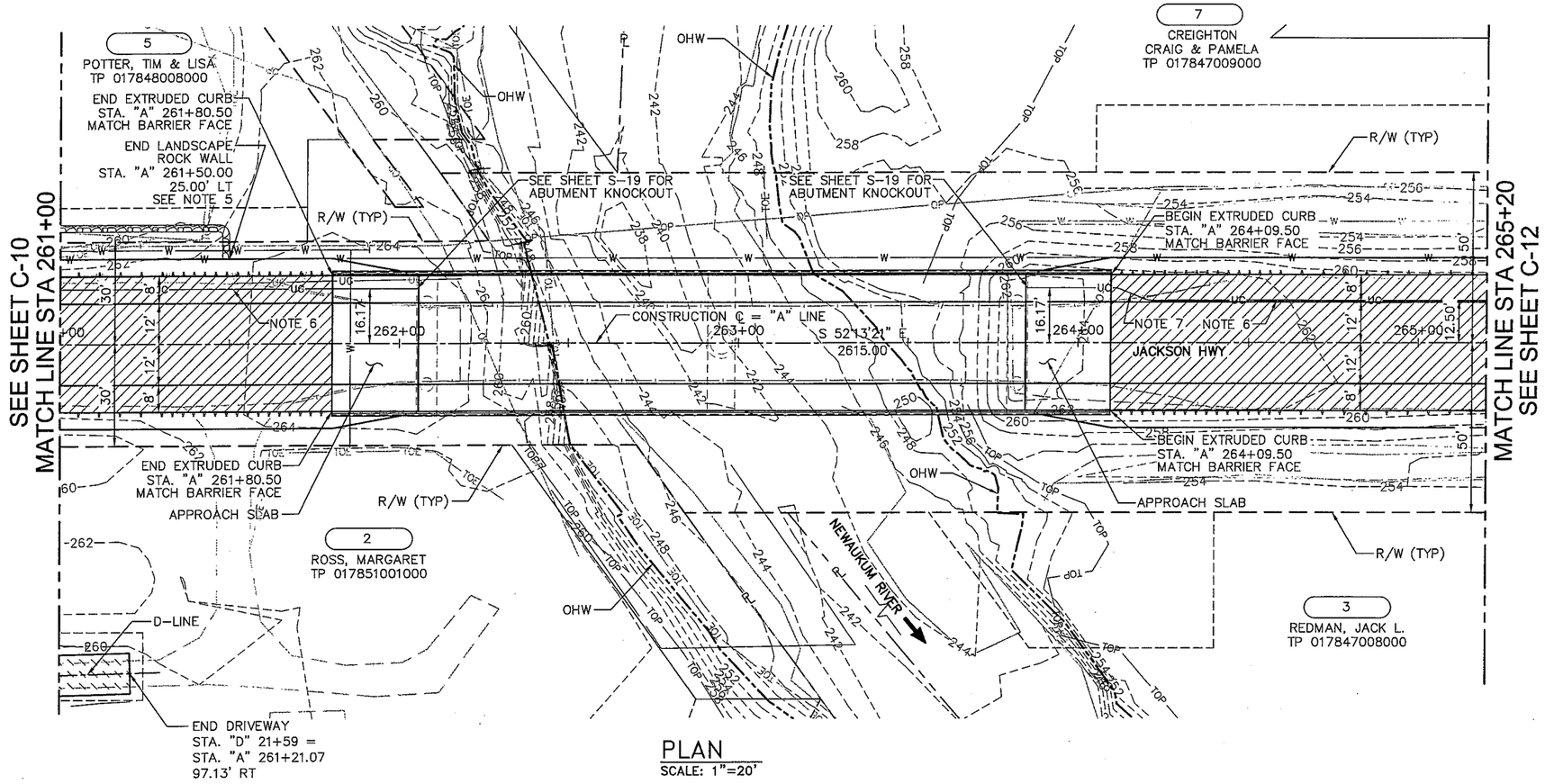

PLAN
SCALE: 1"=20'

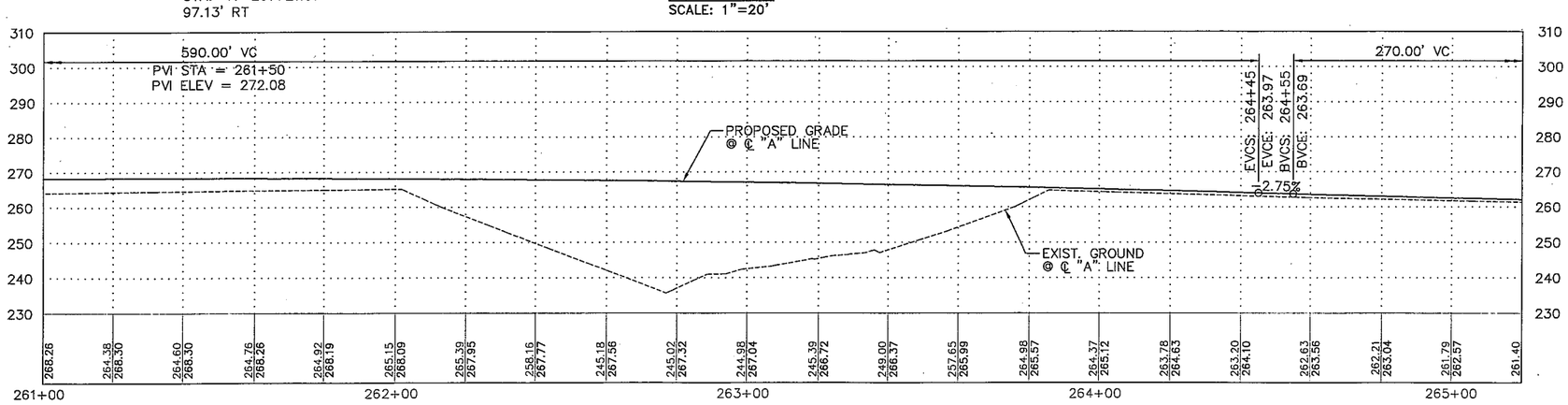

PROFILE
SCALE: 1"=20'

GENERAL NOTES:

1. BEAM GUARDRAIL, SEE SHT C-17 FOR LAYOUT
2. TYP CHANNELIZATION, SEE DETAIL 1 SHT C-11
3. ALL CURB OFFSETS SHALL BE MEASURED TO FACE OF CURB.
4. HATCHING FOR EASEMENTS NOT SHOWN FOR CLARITY. REFER TO SHEET C-2 FOR EASEMENTS.
5. CONTRACTOR TO WRAP ROCK WALL BACK TO SE WALL.
6. TWO 4-INCH DIAM. CONDUIT PIPES. SEE DETAIL ON SHEET C-16.
7. BENDS SHALL BE VIA SWEEPS AND SHALL BE USED AS NECESSARY TO HAVE SUFFICIENT CLEARANCE BETWEEN THE CONDUIT PIPE AND THE DRAINAGE STRUCTURES, AS APPROVED BY THE ENGINEER

LEGEND:

- ORDINARY HIGH WATER (OHW)
- NEW ASPHALT PAVING
- NEW GRAVEL DRIVEWAY

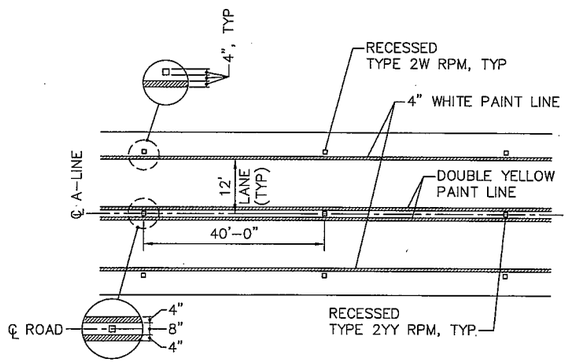

1 TYPICAL ROAD CHANNELIZATION
SCALE: NTS

NOTE: CHANNELIZATION TO BE PLACED BY LEWIS COUNTY.

20 0 20 40
scale feet

AVOID CUTTING UNDERGROUND UTILITY LINES. IT'S COSTLY.

Call before you Dig
1-800-424-5555
UNDERGROUND SERVICE (USA)

NOTE:

EXISTING UTILITY LOCATIONS SHOWN HEREON ARE APPROXIMATE ONLY. IT SHALL BE THE CONTRACTOR'S RESPONSIBILITY TO DETERMINE THE EXACT VERTICAL AND HORIZONTAL LOCATION OF ALL EXISTING UNDER-GROUND AND OVERHEAD UTILITIES PRIOR TO COMMENCING CONSTRUCTION. NO REPRESENTATION IS MADE THAT ALL EXISTING UTILITIES ARE SHOWN HEREON. THE ENGINEER ASSUMES NO RESPONSIBILITY FOR UTILITIES NOT SHOWN OR UTILITIES NOT SHOWN IN THEIR PROPER LOCATION.

MARK	REVISION DESCRIPTION	BY	APP.	DATE

BergerABAM
33301 9th Avenue South, Suite 300
Federal Way, Washington 98003-2600
(206) 431-2300 Fax: (206) 431-2250

Lewis County Department of Public Works

CHARLES W. SERY, STATE OF WASHINGTON, 21872, PROFESSIONAL ENGINEER
12-16-09

LEWIS COUNTY DEPT. OF PUBLIC WORKS
ENGINEER DATE

DRAWN BY JCR
DESIGN BY JCR
CHECK BY SPT
PROJ MGR CWS

LEWIS COUNTY DEPARTMENT OF PUBLIC WORKS
NEWAUKUM BRIDGE NO. 20 REPLACEMENT PROJECT

ROADWAY PLAN & PROFILE
SHEET 2

DRAWING NO. C-11
PROJECT NO. CRP 2072
FED AID NO. BRS-5667(002)
DATE: 12/15/09
SHEET NO. 12 OF 46

SE 1/4, SECT. 13, TOWNSHIP 13 N, RANGE 2 W, W.M.

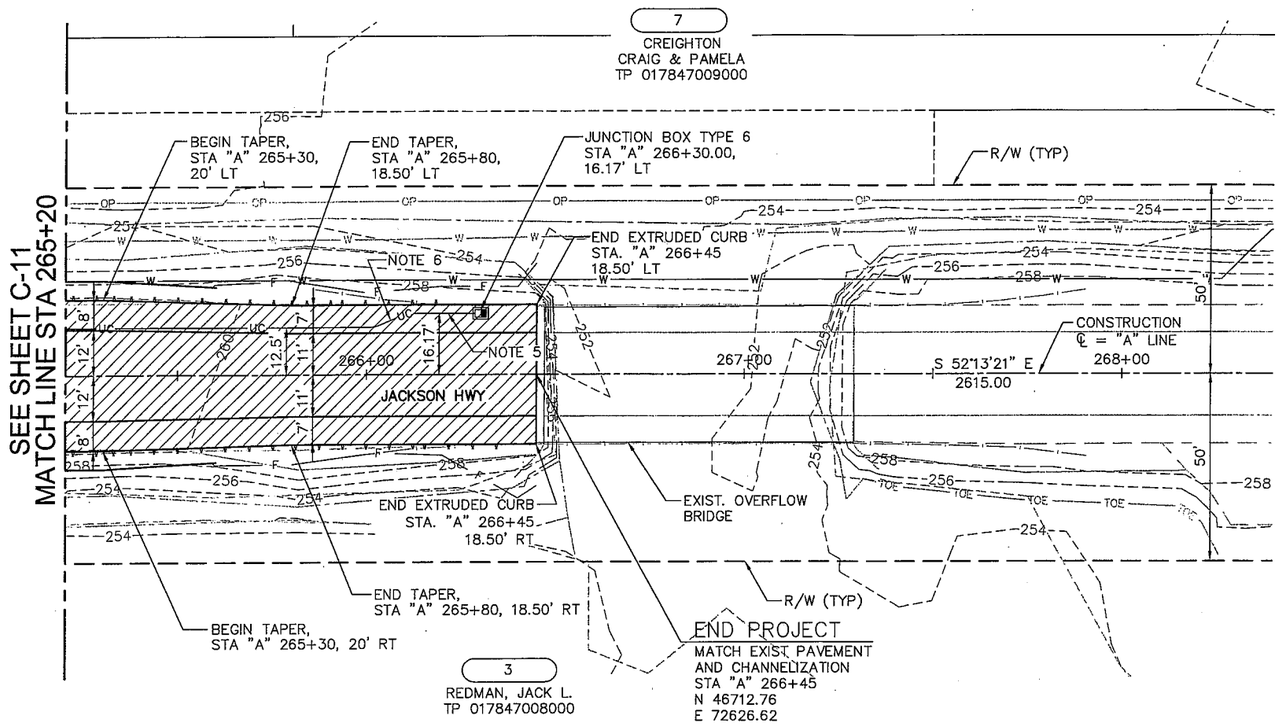

PLAN
SCALE: 1"=20'

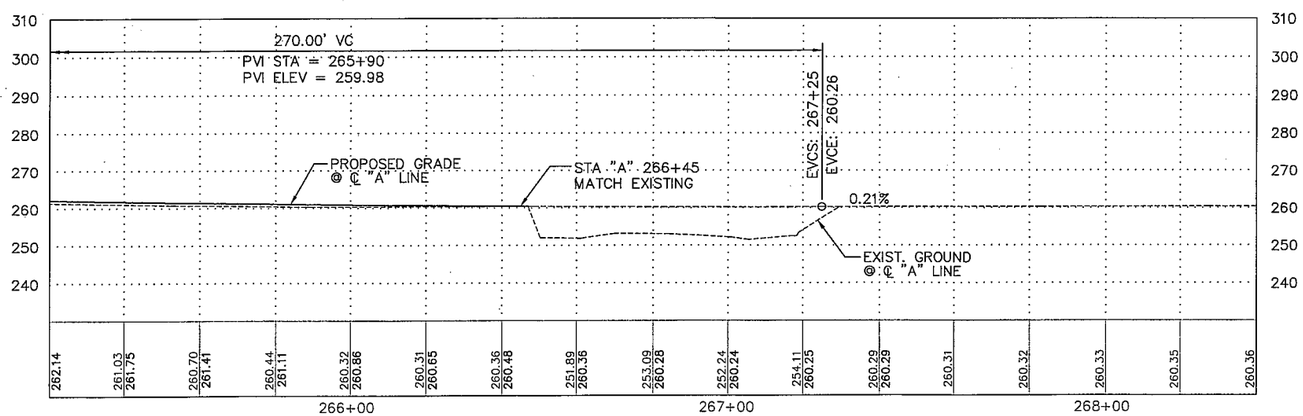

PROFILE
SCALE: 1"=20'

GENERAL NOTES:

1. BEAM GUARDRAIL, SEE SHT C-17 FOR LAYOUT
2. TYP CHANNELIZATION, SEE DETAIL 1 SHT C-11
3. ALL CURB OFFSETS SHALL BE MEASURED TO FACE OF CURB.
4. HATCHING FOR EASEMENTS NOT SHOWN FOR CLARITY. REFER TO SHEET C-2 FOR EASEMENTS.
5. PLACE TWO 4-INCH DIAM. CONDUIT PIPES TO HEAVY DUTY JUNCTION BOX TYPE 6 PER WSDOT STD. PLAN J-11b. ALL EXCAVATION, BEDDING, BACKFILL, AND JUNCTION BOX SHALL BE INCIDENTAL TO THE COST OF THE CONDUIT PIPE. SEE DETAIL ON SHEET C-16.
6. BENDS SHALL BE VIA SWEEPS AND SHALL BE USED AS NECESSARY TO HAVE SUFFICIENT CLEARANCE BETWEEN THE CONDUIT PIPE AND THE DRAINAGE STRUCTURES, AS APPROVED BY THE ENGINEER.

LEGEND:

NEW ASPHALT PAVING

20 0 20 40
scale feet

AVOID CUTTING UNDERGROUND UTILITY LINES. IT'S COSTLY.
Call before you Dig
1-800-424-5555
UNDERGROUND SERVICE (USA)

NOTE:
EXISTING UTILITY LOCATIONS SHOWN HEREON ARE APPROXIMATE ONLY. IT SHALL BE THE CONTRACTOR'S RESPONSIBILITY TO DETERMINE THE EXACT VERTICAL AND HORIZONTAL LOCATION OF ALL EXISTING UNDER-GROUND AND OVERHEAD UTILITIES PRIOR TO COMMENCING CONSTRUCTION. NO REPRESENTATION IS MADE THAT ALL EXISTING UTILITIES ARE SHOWN HEREON. THE ENGINEER ASSUMES NO RESPONSIBILITY FOR UTILITIES NOT SHOWN OR UTILITIES NOT SHOWN IN THEIR PROPER LOCATION.

MARK	REVISION DESCRIPTION	BY	APP.	DATE

BergerABAM
33301 9th Avenue South, Suite 300
Federal Way, Washington 98003-2600
(206) 431-2300 Fax: (206) 431-2250

Lewis County Department of Public Works

CHARLES W. SPAY, STATE OF WASHINGTON, 22117, STRUCTURAL ENGINEER, PROFESSIONAL ENGINEER

LEWIS COUNTY DEPT. OF PUBLIC WORKS
ENGINEER DATE 11/6/10

DRAWN BY JCR
DESIGN BY JCR
CHECK BY SPT
PROJ MGR CWS

LEWIS COUNTY DEPARTMENT OF PUBLIC WORKS
NEWAUKUM BRIDGE NO. 20 REPLACEMENT PROJECT

ROADWAY PLAN & PROFILE
SHEET 3

DRAWING NO. C-12
PROJECT NO. CRP 2072
FED AID NO. BRS-5667(002)
DATE: 12/15/09
SHEET NO. 13 OF 46

Last Saved on Tue Dec 15 2009 at 01:25PM by Reyes File Name: Q:\Federal Way\2005\FAPWT-05-149\CADD\dgns\C-12.dgn Scale: 1

SE 1/4, SECT. 13, TOWNSHIP 13 N, RANGE 2 W, W.M.

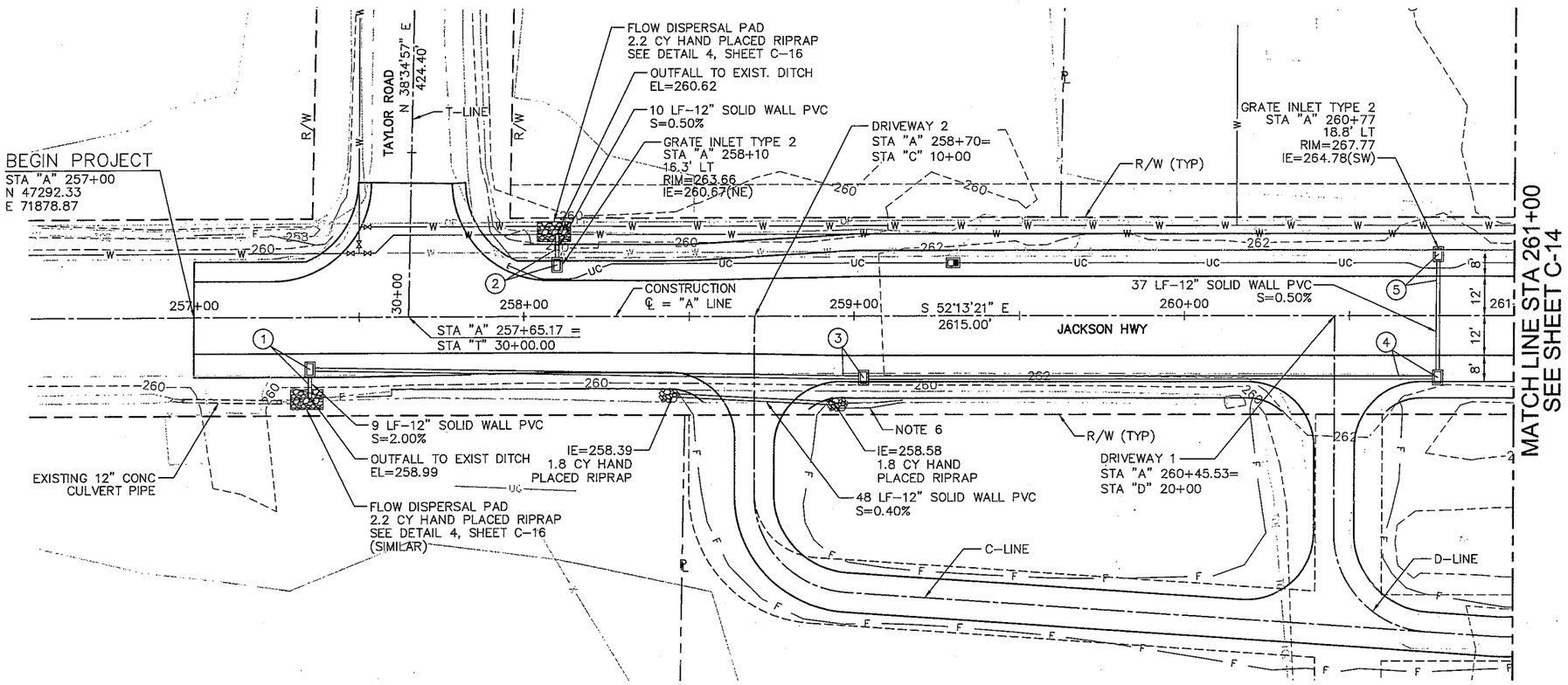

PLAN
SCALE: 1"=20'

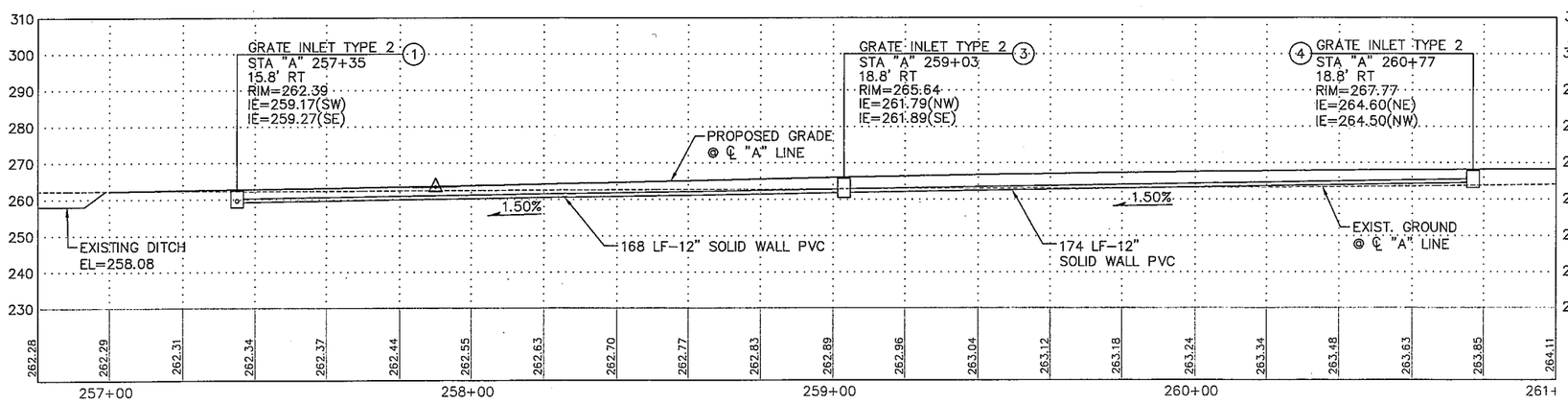

PROFILE
SCALE: 1"=20'

GENERAL NOTES:

1. BEAM GUARDRAIL, SEE SHEET C-17 FOR LAYOUT.
2. TYPICAL CHANNELIZATION, SEE DETAIL 1, SHEET C-11.
3. ALL GRATE INLET TYPE 2'S SHALL BE PLACED IN THE ROTATED POSITION AND SHALL HAVE VANED GRATES. SEE WSDOT STD PLANS B-35.40-00 AND B-40.40-00.
4. OFFSET MEASUREMENTS FOR GRATE INLETS ARE TO THE CENTER OF STRUCTURE.
5. RELOCATION OF OVERHEAD POWER, UNDERGROUND WATER & GAS LINES ARE TO BE DONE BY OTHERS.
6. CONTRACTOR TO SHIFT AND GRADE THE EXISTING DITCH AS NECESSARY TO ENSURE POSITIVE DRAINAGE TO CULVERT PIPE.
7. SEE SHEET C-2 FOR EASEMENTS.

LEGEND

- (X) STORM STRUCTURE – FOR REFERENCE BETWEEN PLAN AND PROFILE VIEWS
- —— F —— FILL LINE
- — — — EXISTING R/W
- —— ℄ —— PROPERTY LINE
- - - - - CONSTRUCTION EASEMENT
- —— W —— FUTURE WATER LINE (BY OTHERS)
- EXIST. WATER LINE
- UNDERGROUND UTILITY
- EXISTING OVERHEAD POWER
- TOE OF SLOPE
- TOP OF BANK
- EXIST. FENCE LINE
- - - -260- - - - CONTOUR LINE

20 0 20 40
scale feet

AVOID CUTTING UNDERGROUND UTILITY LINES. IT'S COSTLY.

Call before you Dig
1-800-424-5555
UNDERGROUND SERVICE (USA)

NOTE:

EXISTING UTILITY LOCATIONS SHOWN HEREON ARE APPROXIMATE ONLY: IT SHALL BE THE CONTRACTOR'S RESPONSIBILITY TO DETERMINE THE EXACT VERTICAL AND HORIZONTAL LOCATION OF ALL EXISTING UNDER-GROUND AND OVERHEAD UTILITIES PRIOR TO COMMENCING CONSTRUCTION. NO REPRESENTATION IS MADE THAT ALL EXISTING UTILITIES ARE SHOWN HEREON. THE ENGINEER ASSUMES NO RESPONSIBILITY FOR UTILITIES NOT SHOWN OR UTILITIES NOT SHOWN IN THEIR PROPER LOCATION.

MARK	REVISION DESCRIPTION	BY	APP.	DATE

BergerABAM
33301 9th Avenue South, Suite 300
Federal Way, Washington 98003-2600
(206) 431-2300 Fax: (206) 431-2250

Lewis County Department of Public Works

CHARLES W. SPRY
STATE OF WASHINGTON
21872
STRUCTURAL ENGINEER
PROFESSIONAL ENGINEER
11-16-09

LEWIS COUNTY DEPT. OF PUBLIC WORKS
ENGINEER DATE

DRAWN BY JCR
DESIGN BY JCR
CHECK BY SPT
PROJ MGR CWS

LEWIS COUNTY DEPARTMENT OF PUBLIC WORKS
NEWAUKUM BRIDGE NO. 20 REPLACEMENT PROJECT

DRAINAGE PROFILES & DETAILS
SHEET 1

DRAWING NO. C-13
PROJECT NO. CRP 2072
FED AID NO. BRS-5667(002)
DATE: 12/15/09
SHEET NO. 14 OF 46

SE 1/4, SECT. 13, TOWNSHIP 13 N, RANGE 2 W, W.M.

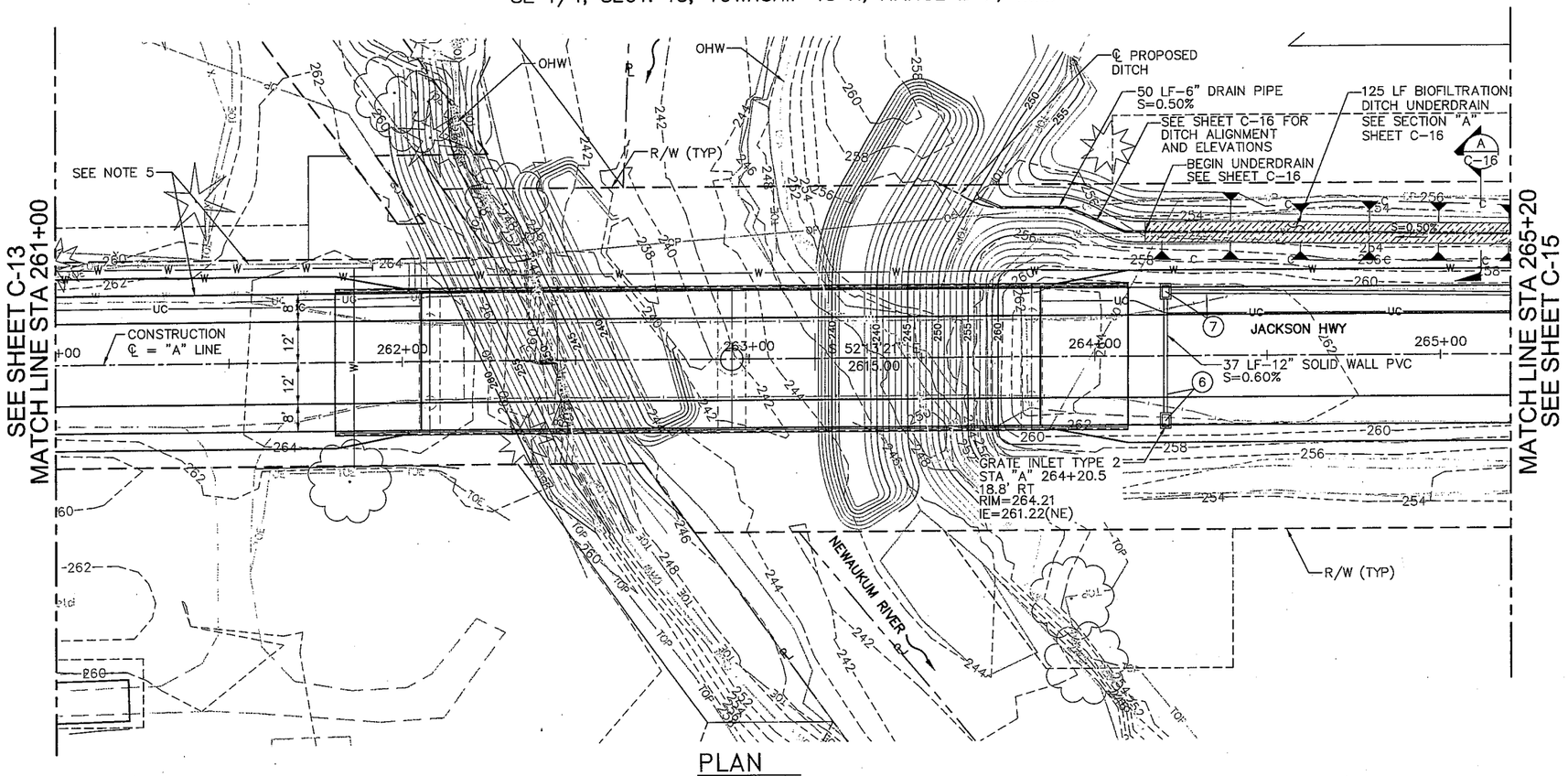

PLAN
SCALE: 1"=20'

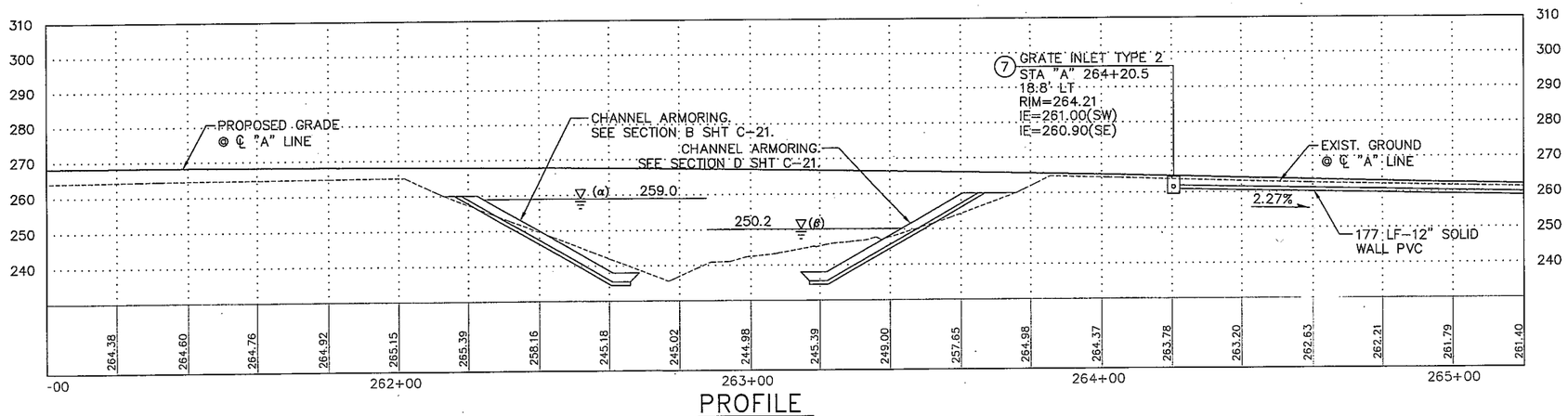

PROFILE
SCALE: 1"=20'

GENERAL NOTES:

1. BEAM GUARDRAIL, SEE SHEET C-17 FOR LAYOUT.
2. TYPICAL CHANNELIZATION, SEE DETAIL 1, SHEET C-11.
3. ALL GRATE INLET TYPE 2'S SHALL BE PLACED IN THE ROTATED POSITION AND SHALL HAVE VANED GRATES. SEE WSDOT STD PLANS B-35.40-00 AND B-40.40-00.
4. OFFSET MEASUREMENTS FOR GRATE INLETS ARE TO THE CENTER OF STRUCTURE.
5. RELOCATION OF OVERHEAD POWER, UNDERGROUND WATER AND GAS LINES ARE TO BE DONE BY OTHERS.
6. SEE SHEET C-2 FOR EASEMENTS.

LEGEND

SEE SHEET C-13

NOTES:

α - 100 YEAR FLOOD LINE (ELEV=259.0)
β - ORDINARY HIGH WATER LINE (ELEV=250.20)

20 0 20 40
scale feet

AVOID CUTTING UNDERGROUND UTILITY LINES. IT'S COSTLY.
Call before you Dig
1-800-424-5555
UNDERGROUND SERVICE (USA)

NOTE:
EXISTING UTILITY LOCATIONS SHOWN HEREON ARE APPROXIMATE ONLY. IT SHALL BE THE CONTRACTOR'S RESPONSIBILITY TO DETERMINE THE EXACT VERTICAL AND HORIZONTAL LOCATION OF ALL EXISTING UNDER-GROUND AND OVERHEAD UTILITIES PRIOR TO COMMENCING CONSTRUCTION. NO REPRESENTATION IS MADE THAT ALL EXISTING UTILITIES ARE SHOWN HEREON. THE ENGINEER ASSUMES NO RESPONSIBILITY FOR UTILITIES NOT SHOWN OR UTILITIES NOT SHOWN IN THEIR PROPER LOCATION.

MARK	REVISION DESCRIPTION	BY	APP.	DATE

BergerABAM
33301 9th Avenue South, Suite 300
Federal Way, Washington 98003-2600
(206) 431-2300 Fax: (206) 431-2250

Lewis County Department of Public Works

CHARLES W. SPRY, STATE OF WASHINGTON, 21872, STRUCTURAL ENGINEER, PROFESSIONAL ENGINEER, 12-16-09

LEWIS COUNTY DEPT. OF PUBLIC WORKS
ENGINEER DATE

DRAWN BY JCR
DESIGN BY JCR
CHECK BY SPT
PROJ MGR CWS

LEWIS COUNTY DEPARTMENT OF PUBLIC WORKS
NEWAUKUM BRIDGE NO. 20 REPLACEMENT PROJECT

DRAINAGE PROFILES & DETAILS
SHEET 2

DRAWING NO. C-14
PROJECT NO. CRP 2072
FED AID NO. BRS-5667(002)
DATE: 12/15/09
SHEET NO. 15 OF 46

SE 1/4, SECT. 13, TOWNSHIP 13 N, RANGE 2 W, W.M.

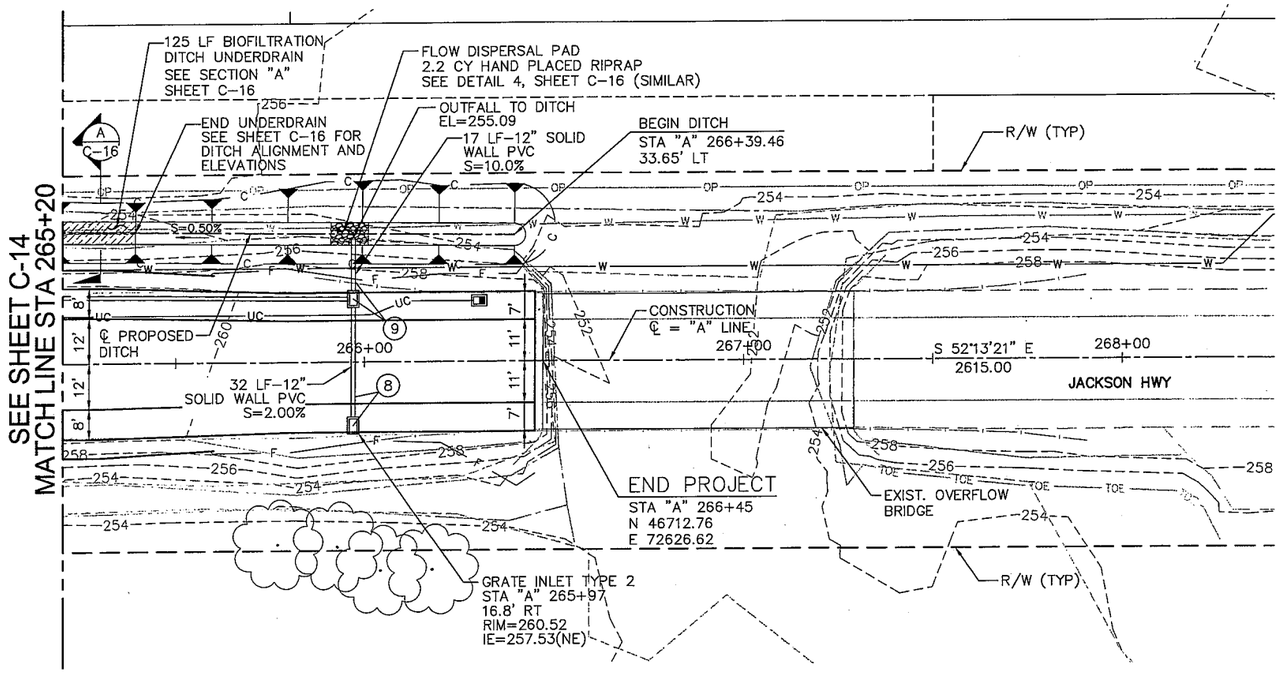

PLAN
SCALE: 1"=20'

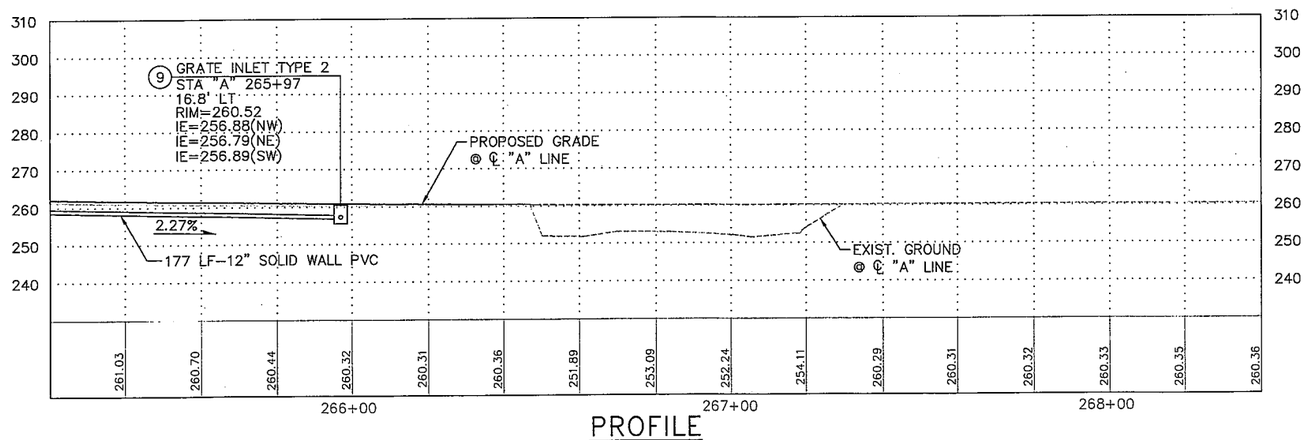

PROFILE
SCALE: 1"=20'

GENERAL NOTES:

1. BEAM GUARDRAIL, SEE SHEET C-17 FOR LAYOUT.
2. TYPICAL CHANNELIZATION, SEE DETAIL 1, SHEET C-11.
3. ALL GRATE INLET TYPE 2'S SHALL BE PLACED IN THE ROTATED POSITION AND SHALL HAVE VANED GRATES. SEE WSDOT STD PLANS B-35.40-00 AND B-40.40-00.
4. OFFSET MEASUREMENTS FOR GRATE INLETS ARE TO THE CENTER OF STRUCTURE.
5. RELOCATION OF OVERHEAD POWER, UNDERGROUND WATER AND GAS LINES ARE TO BE DONE BY OTHERS.
6. SEE SHEET C-2 FOR EASEMENTS.

LEGEND

SEE SHEET C-13

20 0 20 40
scale feet

AVOID CUTTING UNDERGROUND UTILITY LINES. IT'S COSTLY.
Call before you Dig
1-800-424-5555
UNDERGROUND SERVICE (USA)

NOTE:

EXISTING UTILITY LOCATIONS SHOWN HEREON ARE APPROXIMATE ONLY. IT SHALL BE THE CONTRACTOR'S RESPONSIBILITY TO DETERMINE THE EXACT VERTICAL AND HORIZONTAL LOCATION OF ALL EXISTING UNDER-GROUND AND OVERHEAD UTILITIES PRIOR TO COMMENCING CONSTRUCTION. NO REPRESENTATION IS MADE THAT ALL EXISTING UTILITIES ARE SHOWN HEREON. THE ENGINEER ASSUMES NO RESPONSIBILITY FOR UTILITIES NOT SHOWN OR UTILITIES NOT SHOWN IN THEIR PROPER LOCATION.

MARK	REVISION DESCRIPTION	BY	APP.	DATE

BergerABAM
33301 9th Avenue South, Suite 300
Federal Way, Washington 98003-2600
(206) 431-2300 Fax: (206) 431-2250

Lewis County Department of Public Works

CHARLES W. SPRY STATE OF WASHINGTON 21872 PROFESSIONAL ENGINEER
12-16-09

LEWIS COUNTY DEPT. OF PUBLIC WORKS
ENGINEER DATE

DRAWN BY JCR
DESIGN BY JCR
CHECK BY SPT
PROJ MGR CWS

LEWIS COUNTY DEPARTMENT OF PUBLIC WORKS
NEWAUKUM BRIDGE NO. 20 REPLACEMENT PROJECT

DRAINAGE PROFILES & DETAILS
SHEET 3

DRAWING NO. C-15
PROJECT NO. CRP 2072
FED AID NO. BRS-5667(002)
DATE: 12/15/09
SHEET NO. 16 OF 46

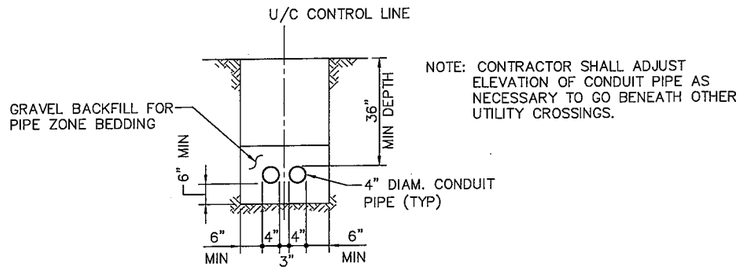

NOTE: CONTRACTOR SHALL ADJUST ELEVATION OF CONDUIT PIPE AS NECESSARY TO GO BENEATH OTHER UTILITY CROSSINGS.

4" DIAM. CONDUIT PIPE DETAIL

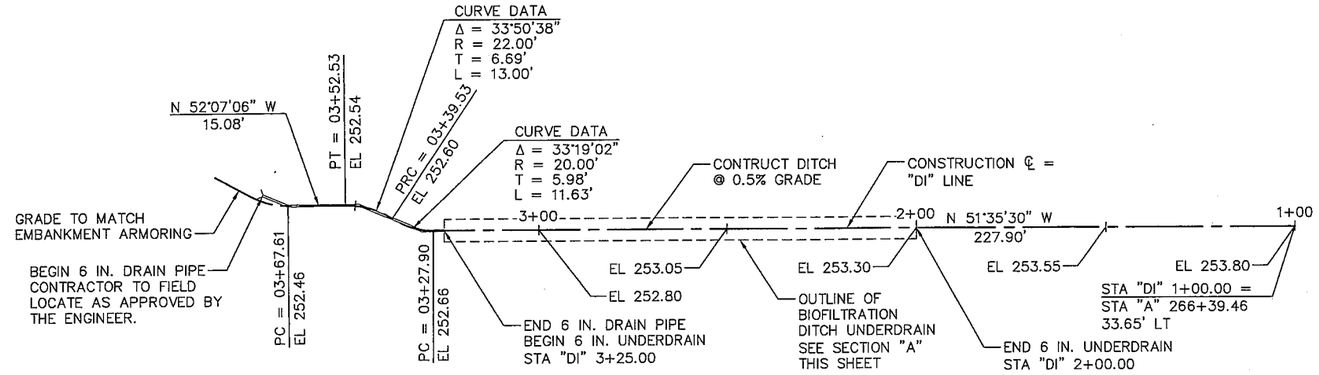

3 DITCH ALIGNMENT AND FG ELEVATIONS

SCALE: 1"=20'

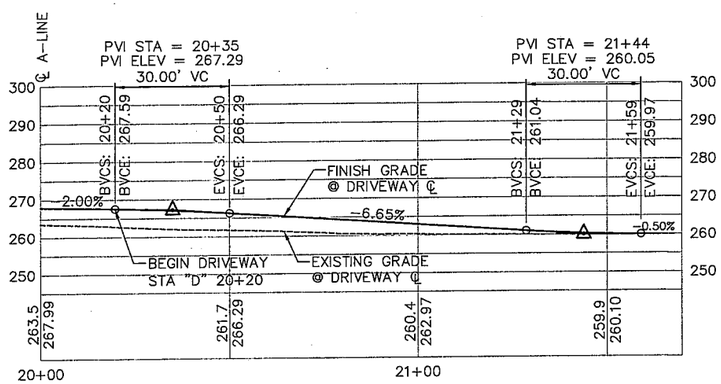

1 D-LINE DRIVEWAY PROFILE

SCALE: 1"=20'

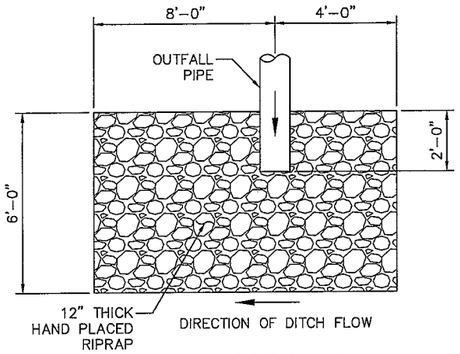

NOTE: SHAPE PAD TO MATCH EXISTING DITCH

4 FLOW DISPERSAL PAD

SCALE: NTS

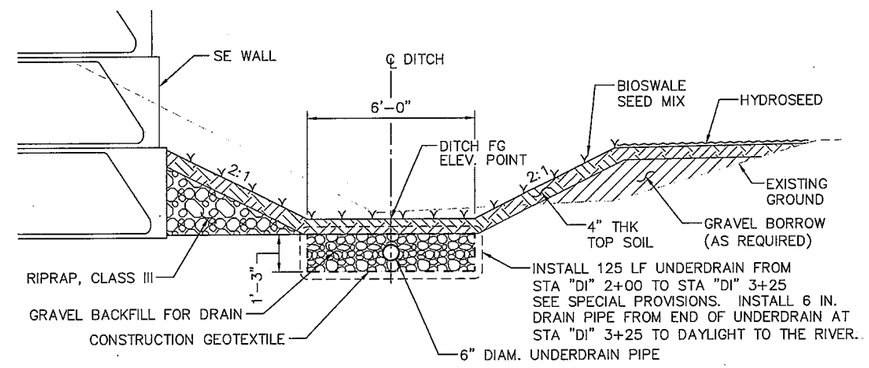

A/C-14 A/C-15 SECTION – DITCH

SCALE: NTS

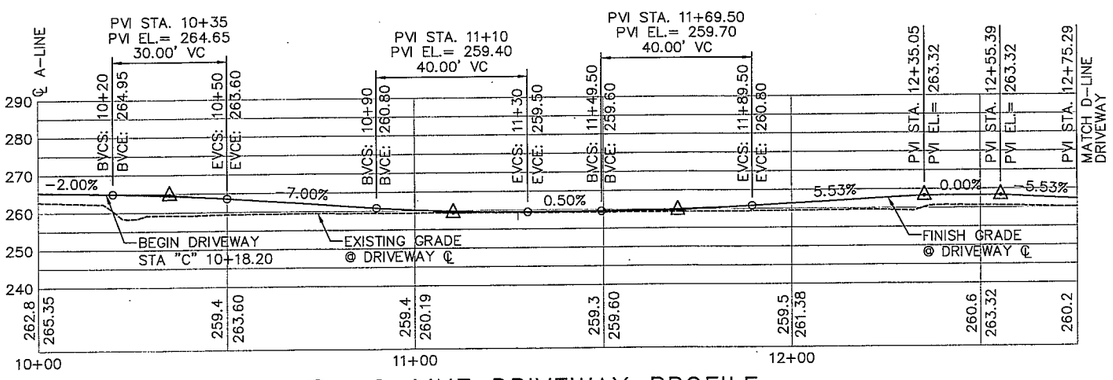

2 C-LINE DRIVEWAY PROFILE

SCALE: 1"=20'

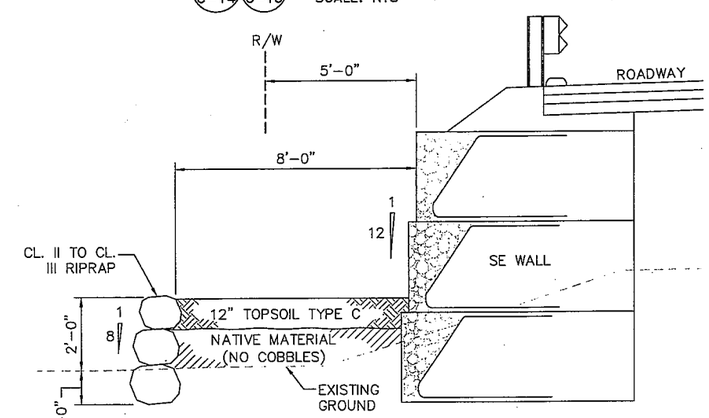

B/C-10 SECTION – ROCK WALL

SCALE: NTS

STA "A" 259+50 (LT) TO STA "A" 261+50 (LT)

MARK	REVISION DESCRIPTION	BY	APP.	DATE

BergerABAM
33301 9th Avenue South, Suite 300
Federal Way, Washington 98003-2600
(206) 431-2300 Fax: (206) 431-2250

Lewis County Department of Public Works

CHARLES W. SPRY — STATE OF WASHINGTON — 21872 — STRUCTURAL ENGINEER — PROFESSIONAL ENGINEER — 1-16-09

LEWIS COUNTY DEPT. OF PUBLIC WORKS

ENGINEER — DATE 1/16/12

DRAWN BY LWC
DESIGN BY LWC
CHECK BY SPT
PROJ MGR CWS

LEWIS COUNTY DEPARTMENT OF PUBLIC WORKS

NEWAUKUM BRIDGE NO. 20 REPLACEMENT PROJECT

MISC PLANS, PROFILES & DETAILS

DRAWING NO. C-16
PROJECT NO. CRP 2072
FED AID NO. BRS-5667(002)
DATE: 12/15/09
SHEET NO. 17 OF 46

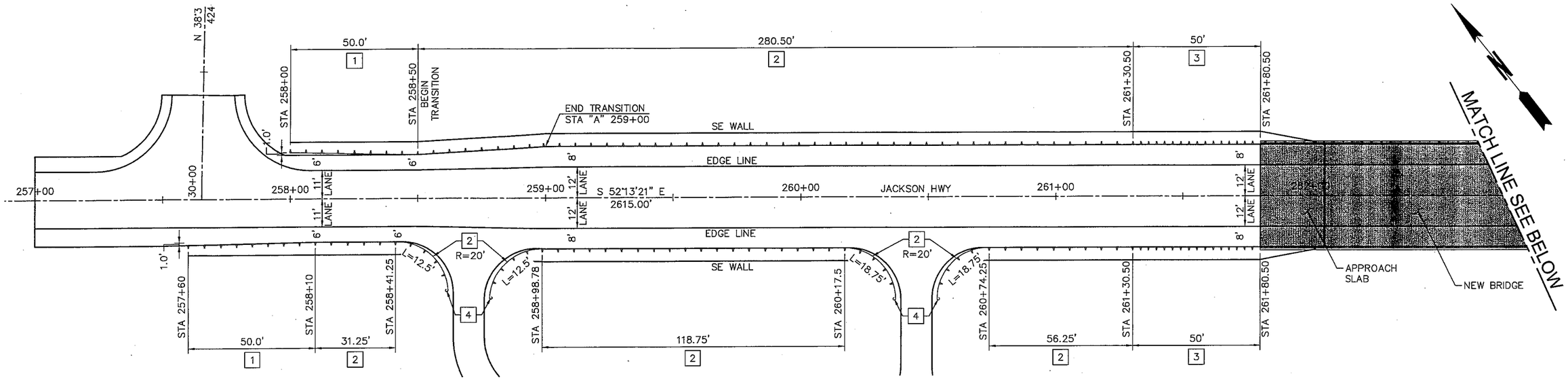

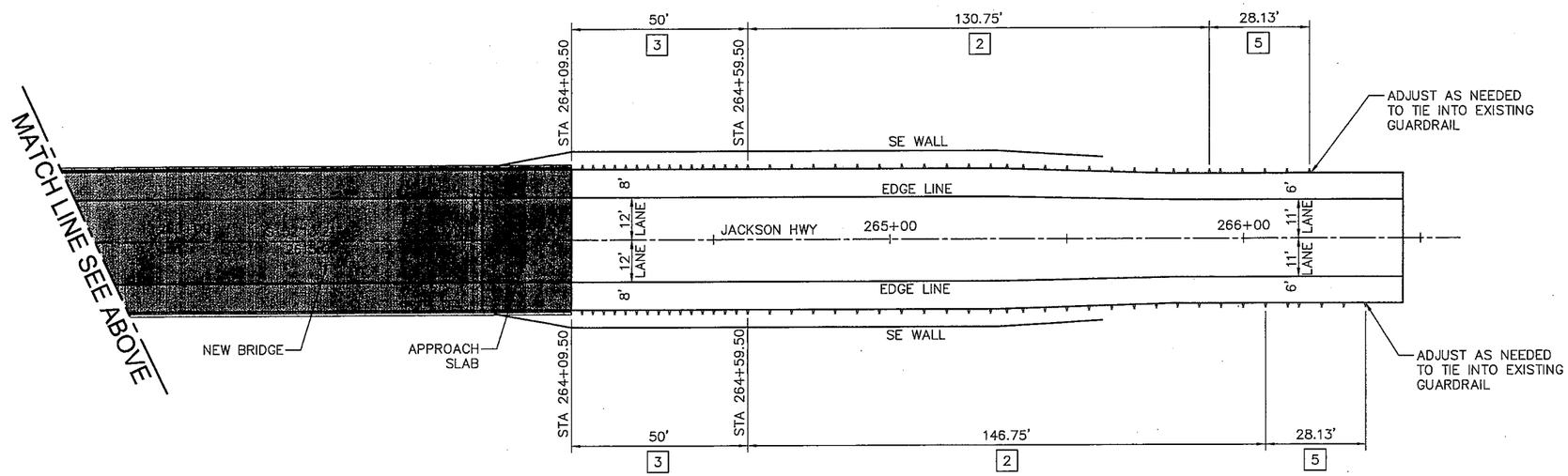

GUARDRAIL PLACEMENT LEGEND

1. BEAM GUARDRAIL TYPE 31 NON-FLARED TERMINAL WITH 8-FT LONG STEEL POST SEE WSDOT STD. PLAN C-22.40-01
2. BEAM GUARDRAIL TYPE 31 WITH 8-FT LONG STEEL POSTS. SEE WSDOT STD. PLAN C-28.40-00
3. BEAM GUARDRAIL (TYPE 31) TRANSITION SECTION TYPE 22, WITH 8-FT LONG STEEL POST W/ THRIE-BEAM TERMINAL END SECTION DESIGN "F" SEE WSDOT STANDARD PLANS C-25.22-02
4. BEAM GUARDRAIL TYPE 31 ANCHOR TYPE 10 PER WSDOT STD. PLAN C-23.60-00
5. BEAM GUARDRAIL TYPE 31 TRANSITION TO BEAM GUARDRAIL TYPE 1 W/ 8-FT LONG STEEL POSTS PER WSDOT STD. PLAN C-25.80-01

NOTE: ALL POST SHALL BE STEEL AND SHALL BE MIN. 8-FT LONG.

GUARDRAIL PLACEMENT LAYOUT

SCALE: 1"=20'

20 0 20 40
scale feet

MARK	REVISION DESCRIPTION	BY	APP.	DATE

BergerABAM
33301 9th Avenue South, Suite 300
Federal Way, Washington 98003-2600
(206) 431-2300 Fax: (206) 431-2250

Lewis County Department of Public Works

CHARLES W. SPRY STATE OF WASHINGTON 21371 PROFESSIONAL ENGINEER 12-16-09

LEWIS COUNTY DEPT. OF PUBLIC WORKS
ENGINEER DATE

DRAWN BY JCR
DESIGN BY JCR
CHECK BY SPT
PROJ MGR CWS

LEWIS COUNTY DEPARTMENT OF PUBLIC WORKS

NEWAUKUM BRIDGE NO. 20 REPLACEMENT PROJECT

GUARDRAIL LAYOUT PLANS

DRAWING NO. C-17
PROJECT NO. CRP 2072
FED AID NO. BRS-5667(002)
DATE: 12/15/09
SHEET NO. 18 OF 46

SE 1/4, SECT. 13, TOWNSHIP 13 N, RANGE 2 W, W.M.

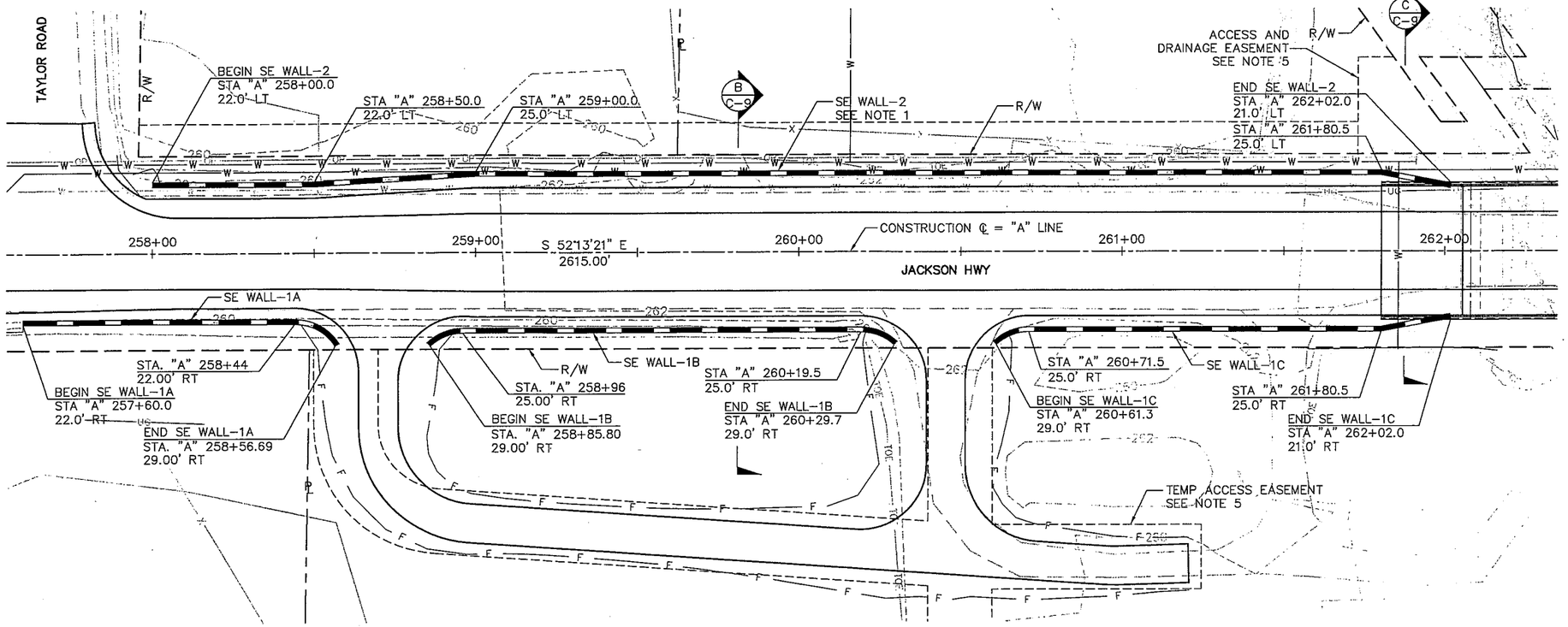

PLAN – SE WALL-1A, WALL-1B, WALL 1-C & WALL-2

SCALE: 1"=20'

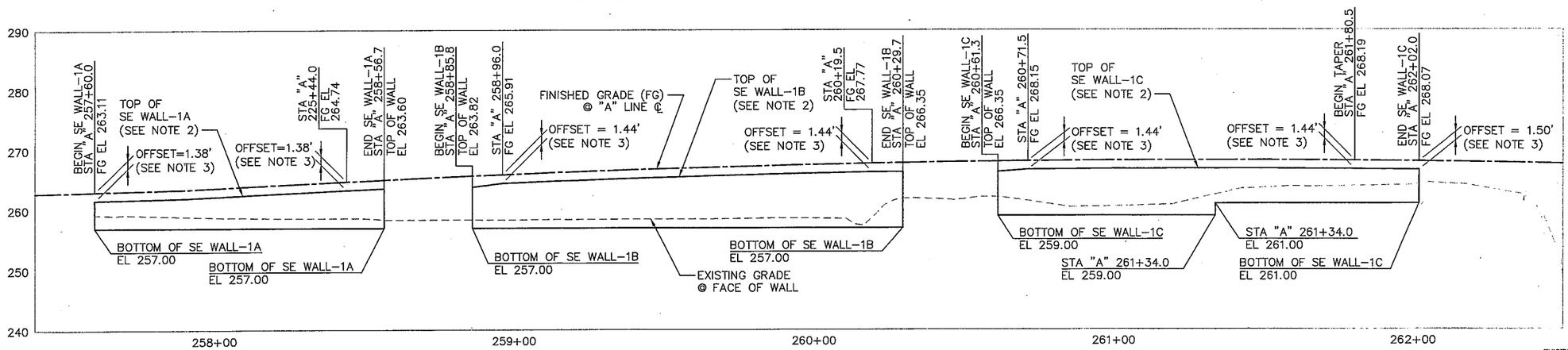

ELEVATION – SE WALL-1A, WALL-1B & WALL-1C

SCALE: HORIZ:1"=20' VERT:1"=10'

GENERAL NOTES

1. FOR SE WALL-2 SEE SHT C-20.
2. ROADWAY FILL ON TOP OF WALL NOT SHOWN ON THIS SHEET. SEE SHT C-9 SECTIONS B & C FOR DETAILS.
3. OFFSET DISTANCE (OF TOP OF WALL FROM FG) SHALL VARY LINEARLY FROM BEGIN TO END OF SE WALL.
4. ALL PLAN VIEW OFFSETS ARE MEASURED AT THE TOP OF WALL ON THE OUTSIDE FACE.
5. HATCHING FOR EASEMENTS NOT SHOWN FOR CLARITY. REFER TO SHEET C-2 FOR EASEMENTS.
6. DEPENDING ON THE CONTRACTOR'S SEQUENCE OF WORK, IF THE CONTRACTOR IS CONSTRUCTING THE SE WALLS BEFORE THE ERECTION OF THE GIRDERS, THEN THE CONTRACTOR SHALL CONSIDER THE TEMPORARY CONSTRUCTION LOADS ON THE SE WALLS DUE TO CONSTRUCTION CRANE, GIRDERS, AND SUPPORT EQUIPMENT

LEGEND

- SE WALL
- F — FILL LINE
- EXISTING R/W
- PROPERTY LINE
- CONSTRUCTION EASEMENT
- W — FUTURE WATER LINE (BY OTHERS)
- EXIST. WATER LINE
- UNDERGROUND UTILITY
- OP — EXISTING OVERHEAD POWER
- TOE OF SLOPE
- TOP OF BANK
- EXIST. FENCE LINE
- CONTOUR LINE

10 0 10 20 scale feet

20 0 20 40 scale feet

NOTE:

EXISTING UTILITY LOCATIONS SHOWN HEREON ARE APPROXIMATE ONLY. IT SHALL BE THE CONTRACTOR'S RESPONSIBILITY TO DETERMINE THE EXACT VERTICAL AND HORIZONTAL LOCATION OF ALL EXISTING UNDER-GROUND AND OVERHEAD UTILITIES PRIOR TO COMMENCING CONSTRUCTION. NO REPRESENTATION IS MADE THAT ALL EXISTING UTILITIES ARE SHOWN HEREON. THE ENGINEER ASSUMES NO RESPONSIBILITY FOR UTILITIES NOT SHOWN OR UTILITIES NOT SHOWN IN THEIR PROPER LOCATION.

AVOID CUTTING UNDERGROUND UTILITY LINES. IT'S COSTLY.

Call before you Dig

1-800-424-5555

UNDERGROUND SERVICE (USA)

MARK	REVISION DESCRIPTION	BY	APP.	DATE

BergerABAM
33301 9th Avenue South, Suite 300
Federal Way, Washington 98003-2600
(206) 431-2300 Fax: (206) 431-2250

Lewis County Department of Public Works

CHARLES W. SPRY STATE OF WASHINGTON 21872 STRUCTURAL ENGINEER PROFESSIONAL ENGINEER 12-16-09

LEWIS COUNTY DEPT. OF PUBLIC WORKS

ENGINEER DATE

DRAWN BY JCR
DESIGN BY JCR
CHECK BY SPT
PROJ MGR CWS

LEWIS COUNTY DEPARTMENT OF PUBLIC WORKS

NEWAUKUM BRIDGE NO. 20 REPLACEMENT PROJECT

SE WALL LAYOUT
SHEET 1

DRAWING NO. C-18
PROJECT NO. CRP 2072
FED AID NO. BRS-5667(002)
DATE: 12/15/09
SHEET NO. 19 OF 46

SE 1/4, SECT. 13, TOWNSHIP 13 N, RANGE 2 W, W.M.

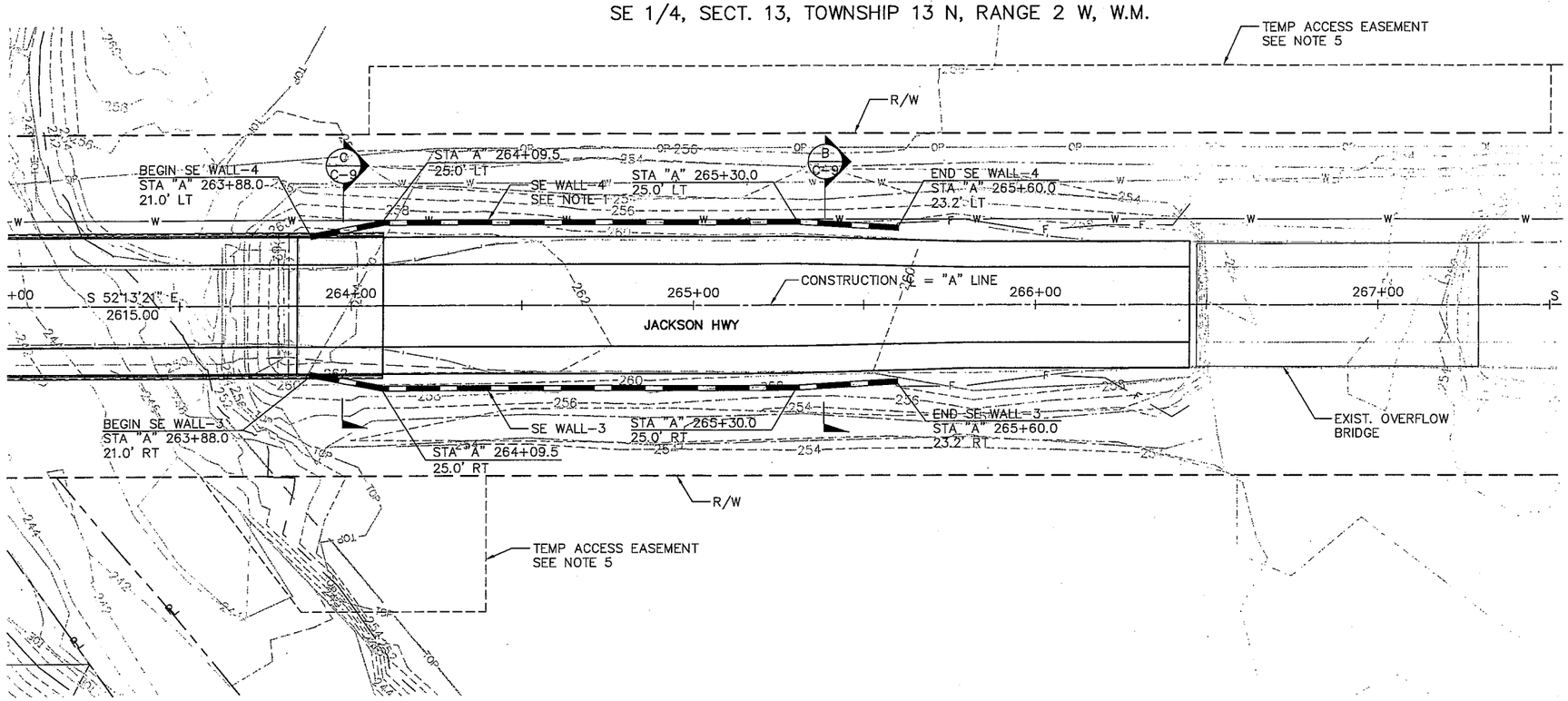

PLAN – SE WALL-3 & WALL-4

SCALE: 1"=20'

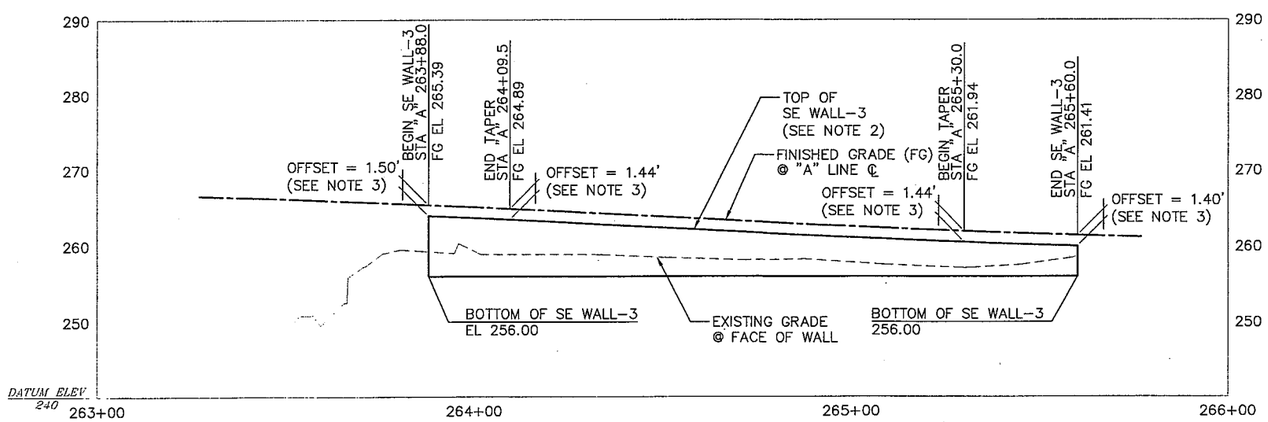

ELEVATION – SE WALL-3

SCALE: HORIZ:1"=20' VERT:1"=10'

GENERAL NOTES

1. FOR SE WALL-4 SEE SHEET C-20.
2. ROADFILL ON TOP OF WALL NOT SHOWN ON THIS SHEET. SEE SHEET C-9 SECTIONS B & C FOR DETAILS.
3. OFFSET DISTANCE (OF TOP OF WALL FROM FG) SHALL VARY LINEARLY FROM BEGIN TO END OF SE WALL.
4. ALL PLAN VIEW OFFSETS ARE MEASURED AT THE TOP OF WALL ON THE OUTSIDE FACE.
5. HATCHING FOR EASEMENTS NOT SHOWN FOR CLARITY. REFER TO SHEET C-2 FOR EASEMENTS.
6. DEPENDING ON THE CONTRACTOR'S SEQUENCE OF WORK, IF THE CONTRACTOR IS CONSTRUCTING THE SE WALLS BEFORE THE ERECTION OF THE GIRDERS, THEN THE CONTRACTOR SHALL CONSIDER THE TEMPORARY CONSTRUCTION LOADS ON THE SE WALLS DUE TO CONSTRUCTION CRANE, GIRDERS, AND SUPPORT EQUIPMENT

LEGEND

SEE SHEET C-18.

10 0 10 20
scale feet

20 0 20 40
scale feet

AVOID CUTTING UNDERGROUND UTILITY LINES. IT'S COSTLY.

Call before you Dig
1-800-424-5555
UNDERGROUND SERVICE (USA)

NOTE:
EXISTING UTILITY LOCATIONS SHOWN HEREON ARE APPROXIMATE ONLY. IT SHALL BE THE CONTRACTOR'S RESPONSIBILITY TO DETERMINE THE EXACT VERTICAL AND HORIZONTAL LOCATION OF ALL EXISTING UNDER-GROUND AND OVERHEAD UTILITIES PRIOR TO COMMENCING CONSTRUCTION. NO REPRESENTATION IS MADE THAT ALL EXISTING UTILITIES ARE SHOWN HEREON. THE ENGINEER ASSUMES NO RESPONSIBILITY FOR UTILITIES NOT SHOWN OR UTILITIES NOT SHOWN IN THEIR PROPER LOCATION.

MARK	REVISION DESCRIPTION	BY	APP.	DATE

BergerABAM
33301 9th Avenue South, Suite 300
Federal Way, Washington 98003-2600
(206) 431-2300 Fax: (206) 431-2250

Lewis County Department of Public Works

CHARLES W. SPRY, STATE OF WASHINGTON, 21872, STRUCTURAL ENGINEER, PROFESSIONAL ENGINEER

LEWIS COUNTY DEPT. OF PUBLIC WORKS

ENGINEER 11/6/09 DATE

DRAWN BY JCR
DESIGN BY JCR
CHECK BY SPT
PROJ MGR CWS

LEWIS COUNTY DEPARTMENT OF PUBLIC WORKS
NEWAUKUM BRIDGE NO. 20 REPLACEMENT PROJECT

SE WALL LAYOUT
SHEET 2

DRAWING NO. C-19
PROJECT NO. CRP 2072
FED AID NO. BRS-5667(002)
DATE: 12/15/09
SHEET NO. 20 OF 46

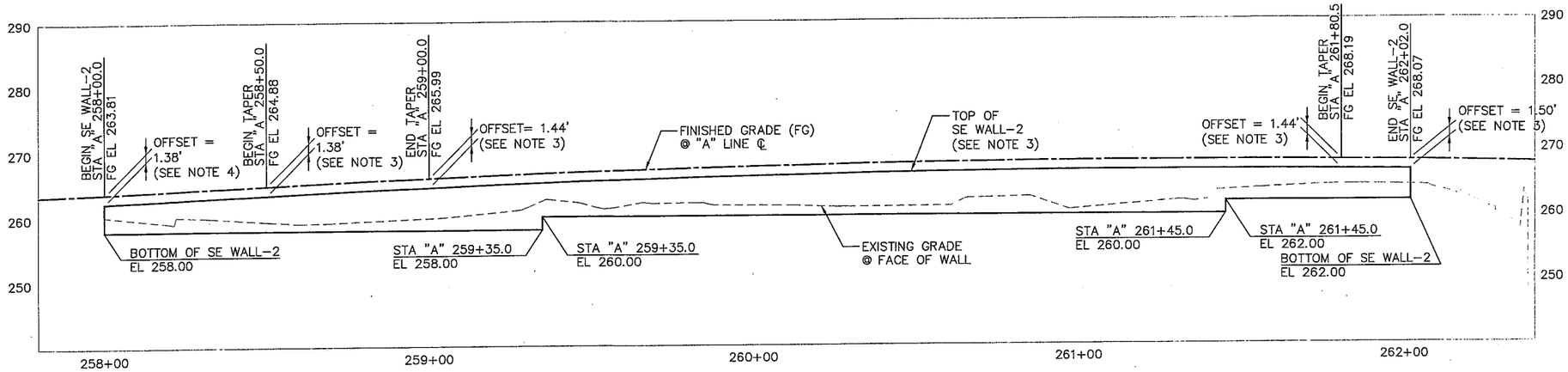

ELEVATION – SE WALL-2

SCALE: HORIZ:1"=20' VERT:1"=10'

GENERAL NOTES

1. SEE SHEET C-18 FOR PLAN VIEW OF SE WALL-2.
2. SEE SHEET C-19 FOR PLAN VIEW OF SE WALL-4.
3. ROADFILL ON TOP OF WALL NOT SHOWN ON THIS SHEET. SEE SHEET C-9 SECTIONS B & C FOR DETAILS.
4. OFFSET DISTANCE (OF TOP OF WALL FROM FG) SHALL VARY LINEARLY FROM BEGIN TO END OF SE WALL.
5. ALL PLAN VIEW OFFSETS ARE MEASURED AT THE TOP OF WALL ON THE OUTSIDE FACE.
6. DEPENDING ON THE CONTRACTOR'S SEQUENCE OF WORK, IF THE CONTRACTOR IS CONSTRUCTING THE SE WALLS BEFORE THE ERECTION OF THE GIRDERS, THEN THE CONTRACTOR SHALL CONSIDER THE TEMPORARY CONSTRUCTION LOADS ON THE SE WALLS DUE TO CONSTRUCTION CRANE, GIRDERS, AND SUPPORT EQUIPMENT

LEGEND

SEE SHEET C-18.

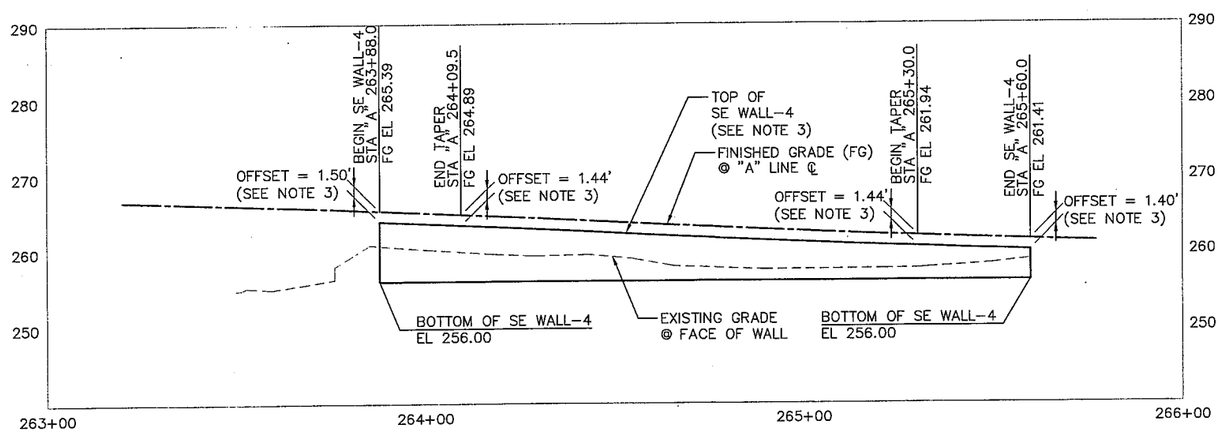

ELEVATION – SE WALL-4

SCALE: HORIZ:1"=20' VERT:1"=10'

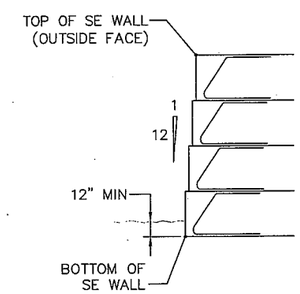

WALL WORK POINT – DETAIL (TYP)

SCALE: NTS

10 0 10 20 scale feet

20 0 20 40 scale feet

AVOID CUTTING UNDERGROUND UTILITY LINES. IT'S COSTLY.

Call before you Dig

1-800-424-5555

UNDERGROUND SERVICE (USA)

NOTE:

EXISTING UTILITY LOCATIONS SHOWN HEREON ARE APPROXIMATE ONLY. IT SHALL BE THE CONTRACTOR'S RESPONSIBILITY TO DETERMINE THE EXACT VERTICAL AND HORIZONTAL LOCATION OF ALL EXISTING UNDER-GROUND AND OVERHEAD UTILITIES PRIOR TO COMMENCING CONSTRUCTION. NO REPRESENTATION IS MADE THAT ALL EXISTING UTILITIES ARE SHOWN HEREON. THE ENGINEER ASSUMES NO RESPONSIBILITY FOR UTILITIES NOT SHOWN OR UTILITIES NOT SHOWN IN THEIR PROPER LOCATION.

MARK	REVISION DESCRIPTION	BY	APP.	DATE

BergerABAM
33301 9th Avenue South, Suite 300
Federal Way, Washington 98003-2600
(206) 431-2300 Fax: (206) 431-2250

Lewis County Department of Public Works

CHARLES W. SPRY, STATE OF WASHINGTON, 21872, STRUCTURAL ENGINEER, PROFESSIONAL ENGINEER — 12-16-09

LEWIS COUNTY DEPT. OF PUBLIC WORKS

ENGINEER DATE

DRAWN BY JCR
DESIGN BY JCR
CHECK BY SPT
PROJ MGR CWS

LEWIS COUNTY DEPARTMENT OF PUBLIC WORKS

NEWAUKUM BRIDGE NO. 20 REPLACEMENT PROJECT

SE WALL LAYOUT
SHEET 3

DRAWING NO. C-20
PROJECT NO. CRP 2072
FED AID NO. BRS-5667(002)
DATE: 12/15/09
SHEET NO. 21 OF 46

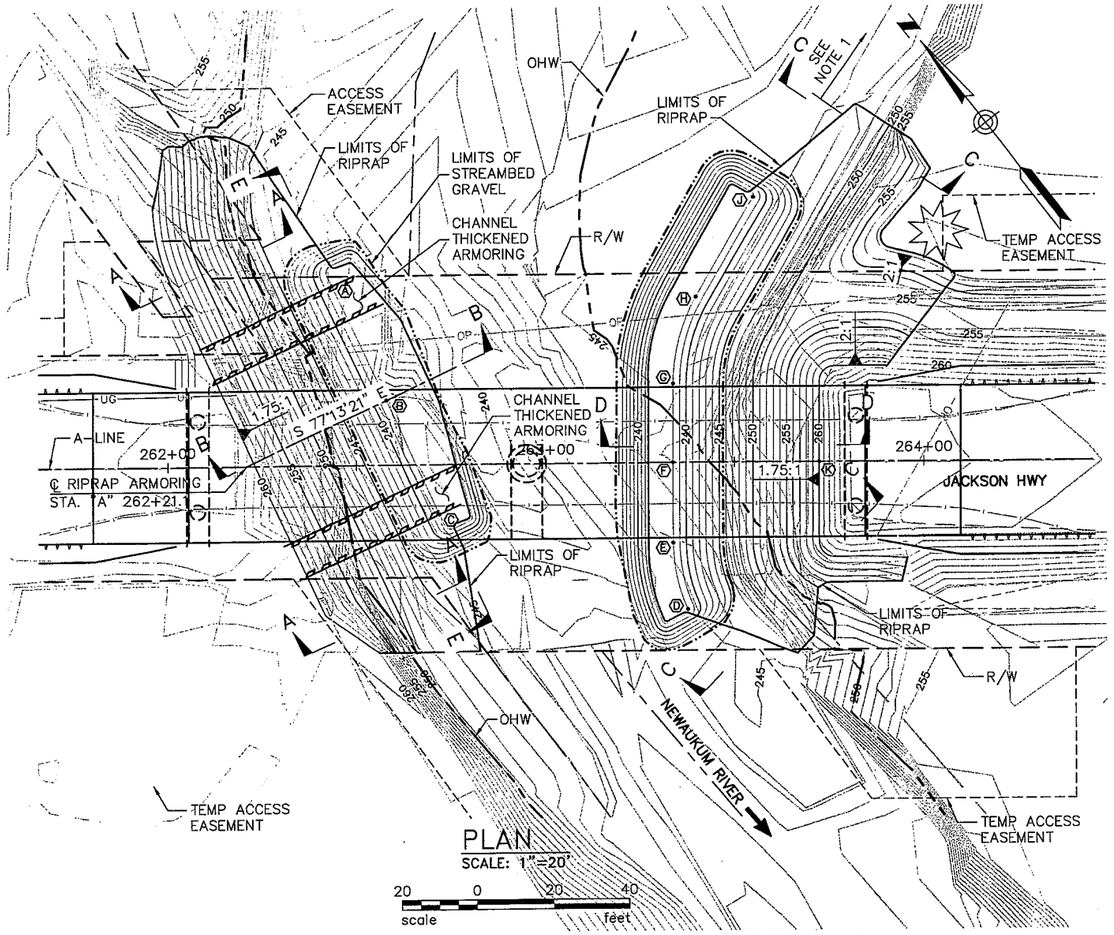

PLAN

SCALE: 1"=20'

20 0 20 40
scale feet

NOTE 1: UPSTREAM EMBANKMENT STABILIZATION NOT SHOWN. TO BE DONE BY OTHERS.

POINT	NORTHING	EASTING
A	46996.80	72337.69
B	46964.13	72330.28
C	46931.43	72322.86
D	46870.86	72358.95
E	46887.20	72366.74
F	46904.07	72379.81
G	46920.57	72392.61
H	46934.91	72411.41
J	46946.44	72439.34
K	46880.48	72410.24

EXCAVATION AND FILL BELOW OHW EL=250.20		
EXCAVATION	1953	CY
CL. III RIPRAP	741	CY
FILTER STONE	310	CY
STREAMBED GRAVEL	730	CY

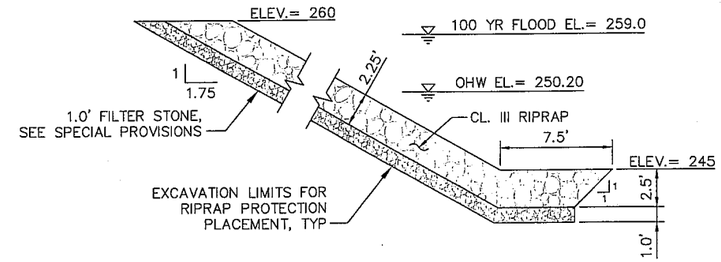

A CHANNEL ARMORING DETAIL

SCALE: NTS

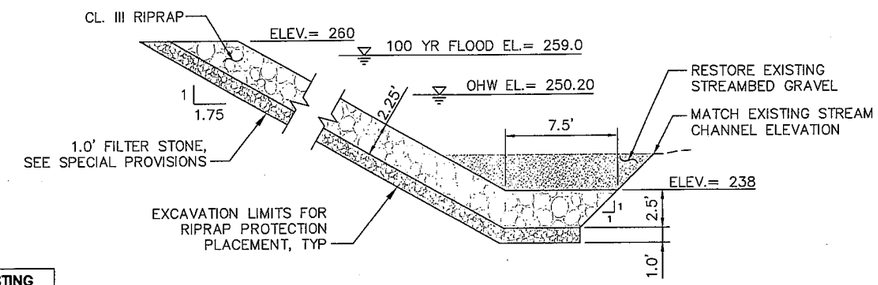

B CHANNEL ARMORING DETAIL

SCALE: NTS

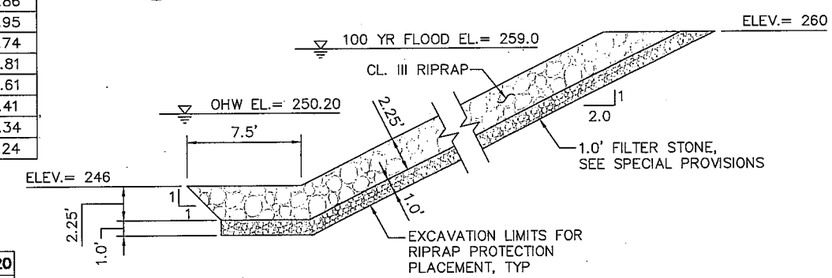

C CHANNEL ARMORING DETAIL

SCALE: NTS

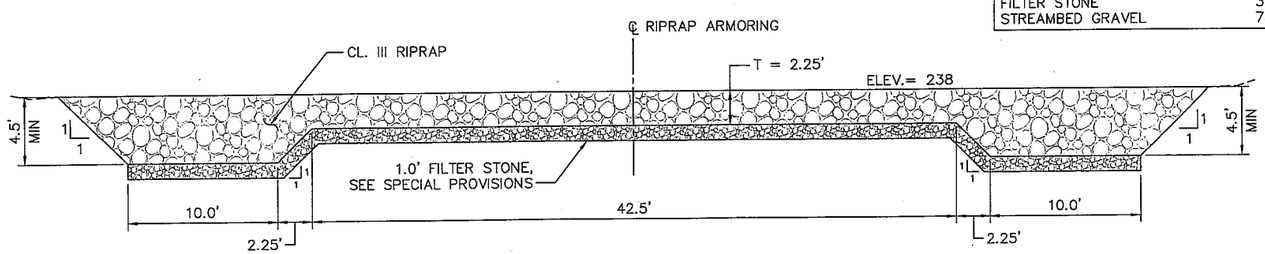

E ARMORING THICKENED EDGE DETAIL

SCALE: NTS

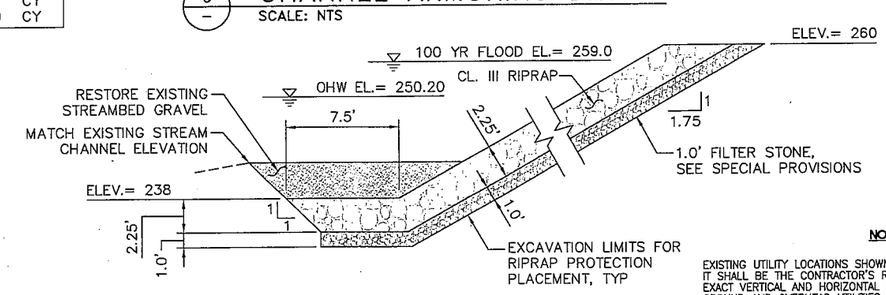

D CHANNEL ARMORING DETAIL

SCALE: NTS

AVOID CUTTING UNDERGROUND UTILITY LINES. IT'S COSTLY.

Call before you Dig

1-800-424-5555

UNDERGROUND SERVICE (USA)

NOTE:

EXISTING UTILITY LOCATIONS SHOWN HEREON ARE APPROXIMATE ONLY. IT SHALL BE THE CONTRACTOR'S RESPONSIBILITY TO DETERMINE THE EXACT VERTICAL AND HORIZONTAL LOCATION OF ALL EXISTING UNDER-GROUND AND OVERHEAD UTILITIES PRIOR TO COMMENCING CONSTRUCTION. NO REPRESENTATION IS MADE THAT ALL EXISTING UTILITIES ARE SHOWN HEREON. THE ENGINEER ASSUMES NO RESPONSIBILITY FOR UTILITIES NOT SHOWN OR UTILITIES NOT SHOWN IN THEIR PROPER LOCATION.

MARK	REVISION DESCRIPTION	BY	APP.	DATE

BergerABAM
33301 9th Avenue South, Suite 300
Federal Way, Washington 98003-2600
(206) 431-2300 Fax: (206) 431-2250

Lewis County Department of Public Works

CHARLES W. SPRY, STATE OF WASHINGTON, 21872, STRUCTURAL ENGINEER, PROFESSIONAL ENGINEER — 12-16-09

LEWIS COUNTY DEPT. OF PUBLIC WORKS

ENGINEER DATE

DRAWN BY JCR
DESIGN BY SPT
CHECK BY SPT
PROJ MGR CWS

LEWIS COUNTY DEPARTMENT OF PUBLIC WORKS

NEWAUKUM BRIDGE NO. 20 REPLACEMENT PROJECT

EMBANKMENT ARMORING

DRAWING NO. C-21
PROJECT NO. CRP 2072
FED AID NO. BRS-5667(002)
DATE: 12/15/09
SHEET NO. 22 OF 46

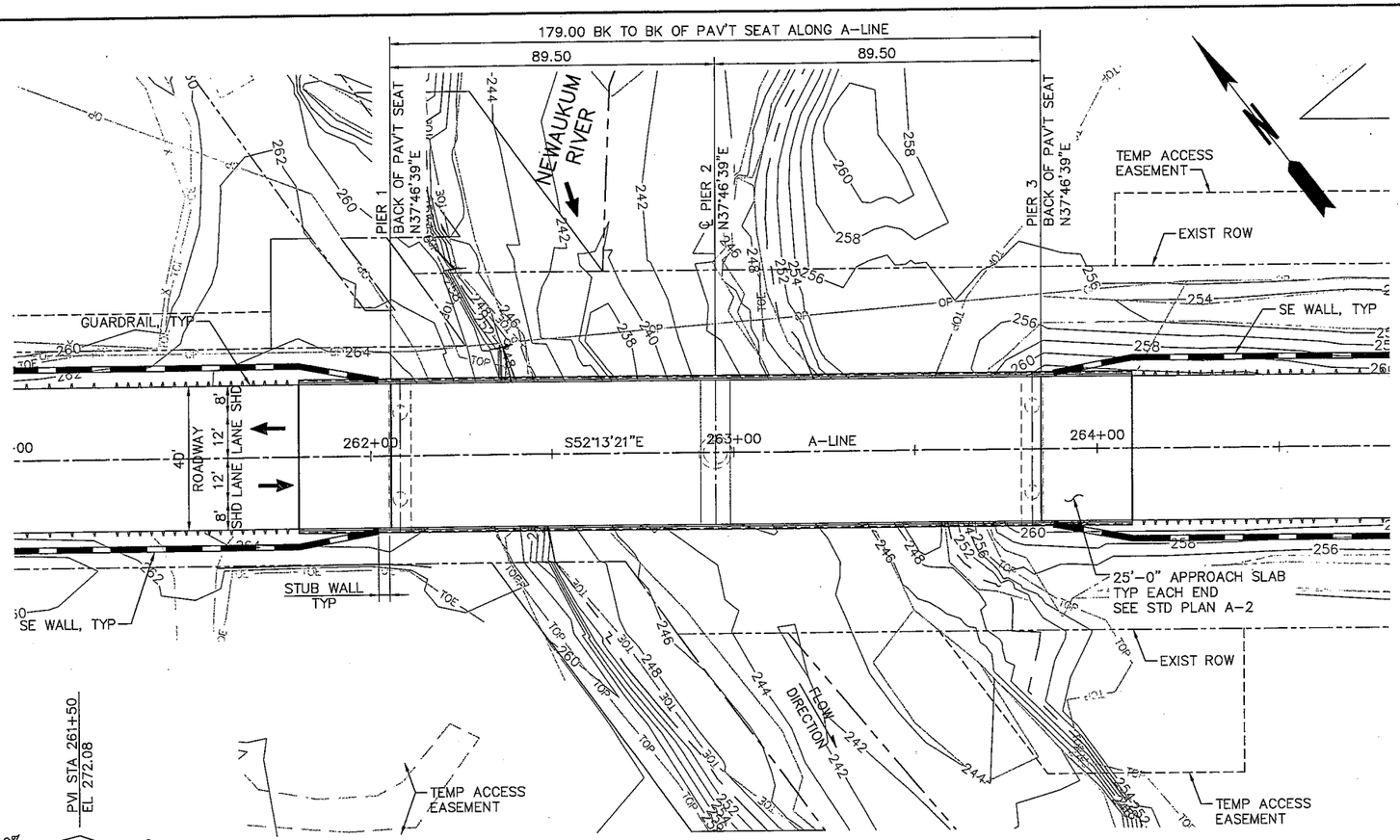

PLAN

SCALE: 1"=20'

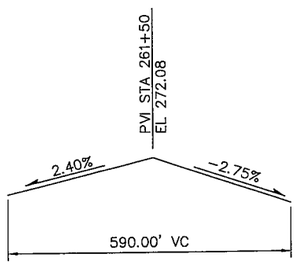

A-LINE PROFILE

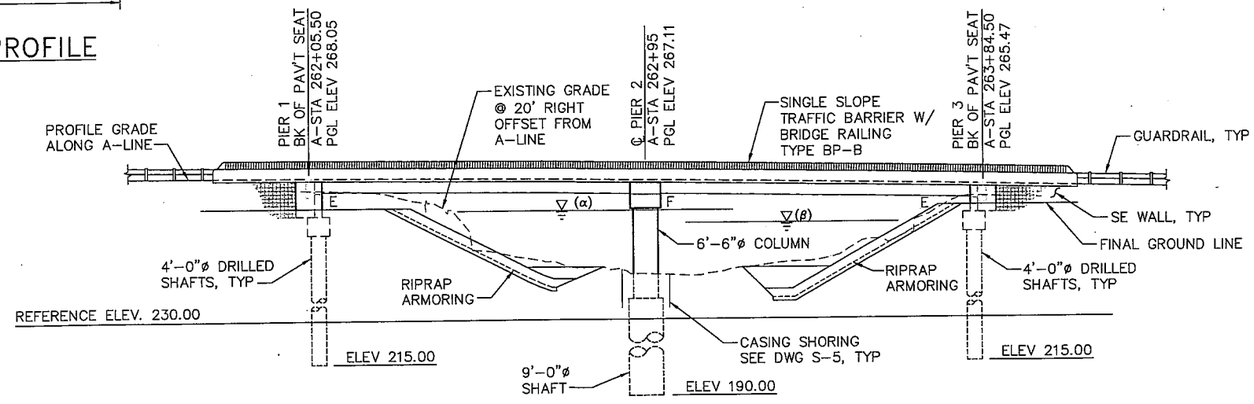

ELEVATION

SCALE: 1"=20'

NGVD 1929

GENERAL STRUCTURAL NOTES:

SPECIFICATIONS & DESCRIPTIONS:

1. ALL MATERIAL AND WORKMANSHIP SHALL BE IN ACCORDANCE WITH THE REQUIREMENTS OF THE WASHINGTON STATE DEPARTMENT OF TRANSPORTATION STANDARD SPECIFICATIONS FOR ROAD, BRIDGE, AND MUNICIPAL CONSTRUCTION, DATED 2008, (ENGLISH EDITION) AND THE AMENDMENTS AND SPECIAL PROVISIONS.
2. THIS STRUCTURE HAS BEEN DESIGNED IN ACCORDANCE WITH THE REQUIREMENTS OF THE AASHTO LRFD BRIDGE DESIGN SPECIFICATIONS, 3RD EDITION 2004, AND AND THE WASHINGTON STATE DEPARTMENT OF TRANSPORTATION BRIDGE DESIGN MANUAL.

LOADING/MISCELLANEOUS:

3. THE BRIDGE CONSISTS OF PC CONCRETE GIRDER CONSTRUCTION. THE BRIDGE IS CONTINUOUS FROM THE PIER 1 TO PIER 3 ABUTMENTS. IT IS FOUNDED ON DRILLED SHAFTS AT ALL PIERS.
4. SEISMIC DESIGN OF THE STRUCTURE IS IN ACCORDANCE WITH THE SPECIFICATIONS IN NOTE 2 ABOVE, USING AN ACCELERATION COEFFICIENT OF 0.22 AND A SOIL PROFILE TYPE II.
5. THE BRIDGE HAS BEEN DESIGNED FOR HL-93 LOADING ACCORDING TO THE SPECIFICATIONS IN NOTE 2 ABOVE.
6. FOUNDATION ELEVATIONS AND SUBSTRUCTURE DETAILS ARE SUBJECT TO CHANGE DEPENDING UPON SOIL CONDITIONS ENCOUNTERED. REINFORCING STEEL FOR DRILLED SHAFTS AND COLUMNS SHALL NOT BE CUT UNTIL FINAL SHAFT ELEVATIONS HAVE BEEN DETERMINED AND SUBSTRUCTURE DETAILS HAVE BEEN MODIFIED IF NECESSARY.
7. THE CONCRETE IN THE SHAFTS SHALL BE CLASS 4000P. THE CONCRETE IN THE COLUMNS, PIER CROSSBEAMS, DIAPHRAGMS, AND ALL OTHER CAST-IN-PLACE CONCRETE SHALL BE CLASS 4000. REFER TO THE GIRDER SHEETS FOR THE CONCRETE IN THE PRECAST GIRDER.
8. THE NUMBER AND LENGTH OF REINFORCING BARS SHALL BE DETERMINED BY THE CONTRACTOR FROM THE PLANS. ALL REINFORCING BARS SHALL BE AASHTO M-31 UNLESS SHOWN OTHERWISE. FOR HOOKS AND BENDS ON THE REINFORCING BARS, USE STIRRUPS/TIE HOOK AND BEND DIMENSIONS IF REINFORCEMENT IS SPECIFIEDAS A STIRRUP OR TIE, OTHERWISE USE STANDARD HOOK AND BEND DIMENSIONS.
9. UNLESS OTHERWISE SHOWN IN THE PLANS, THE CONCRETE COVER MEASURED FROM THE FACE OF THE CONCRETE TO THE FACE OF ANY REINFORCING STEEL SHALL BE 2 INCHES AT THE BOTTOM OF THE APPROACH SLABS, 2 INCHES ON SIDE OF COLUMNS, 2 INCHES ON SIDE AND BOTTOM OF CROSSBEAMS/ABUTMENTS, AND 1-½ INCHES AT ALL OTHER LOCATIONS. EDGES OF CONCRETE THAT WILL BE EXPOSED UPON COMPLETION OF THE STRUCTURE SHALL BE CHAMFERED 1/2 INCH UNLESS OTHERWISE NOTED.
10. ABBREVIATIONS CJ OR CONSTR JT, AS SHOWN ON THE PLANS, SHALL BE TAKEN TO MEAN A CONSTRUCTION JOINT W/ A ROUGHENED SURFACE TO 1/4 INCH AMPLITUDE.
11. ALL PLAN DIMENSIONS ARE MEASURED HORIZONTALLY, UNLESS NOTED OTHERWISE, AND REFLECT THE GEOMETRIC SHAPE AND LOCATION OF ALL ELEMENTS AT A MEAN TEMPERATURE OF 64 DEGREES FAHRENHEIT.
12. ALL DIMENSIONS AND ELEVATIONS SHALL BE VERIFIED IN FIELD BY THE CONTRACTOR.
13. THE FOLLOWING INDICATES THE LOCATION AND DESIGNATION OF SOIL BORINGS: ⊕ B-1.

NOTES:

E - EXPANSION END OF GIRDER
F - FIXED END OF GIRDER

α - 100 YEAR FLOOD LINE (ELEV=259.0)
β - ORDINARY HIGH WATER LINE (ELEV=250.20)

1. ELEVATION DRAWN LOOKING ALONG BEARING N37°46'39"E

LEGEND

A / S-1 — IDENTIFIES SECTION, VIEW OR DETAIL; TAKEN OR SHOWN ON BRIDGE SHEET S-1

A / – — TAKEN OR SHOWN ON THE SAME SHEET

P.C. GIRDERS: (W41DG)
LOADING: HL-93

MARK	REVISION DESCRIPTION	BY	APP.	DATE

BergerABAM
33301 9th Avenue South, Suite 300
Federal Way, Washington 98003-2600
(206) 431-2300 Fax: (206) 431-2250

Lewis County Department of Public Works

CHARLES W. SPRY — STATE OF WASHINGTON — 21872 — STRUCTURAL ENGINEER — PROFESSIONAL ENGINEER — 12-16-09

LEWIS COUNTY DEPT. OF PUBLIC WORKS
ENGINEER DATE

DRAWN BY LWC
DESIGN BY GAB
CHECK BY CWS
PROJ MGR CWS

LEWIS COUNTY DEPARTMENT OF PUBLIC WORKS
NEWAUKUM BRIDGE NO. 20 REPLACEMENT PROJECT

GENERAL PLAN & ELEVATION

DRAWING NO. S-1
PROJECT NO. CRP 2072
FED AID NO. BRS-5667(002)
DATE: 12/15/09
SHEET NO. 23 OF 46

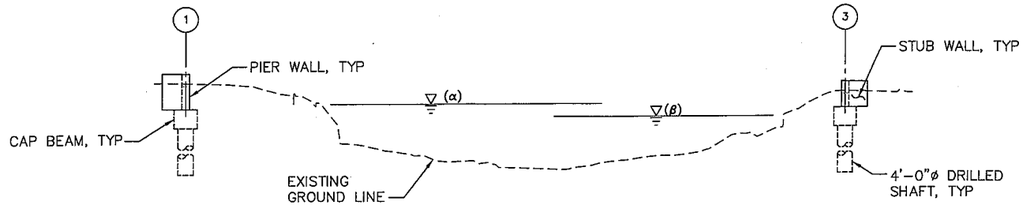

STAGE A

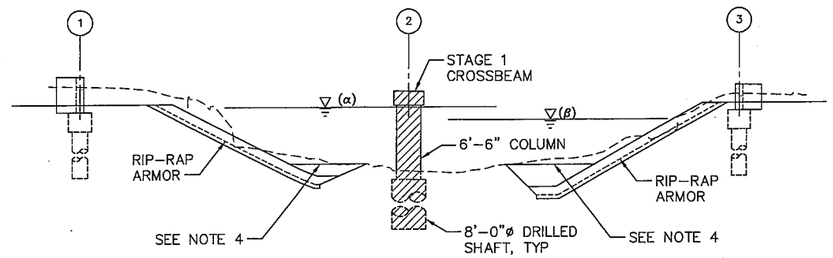

STAGE B

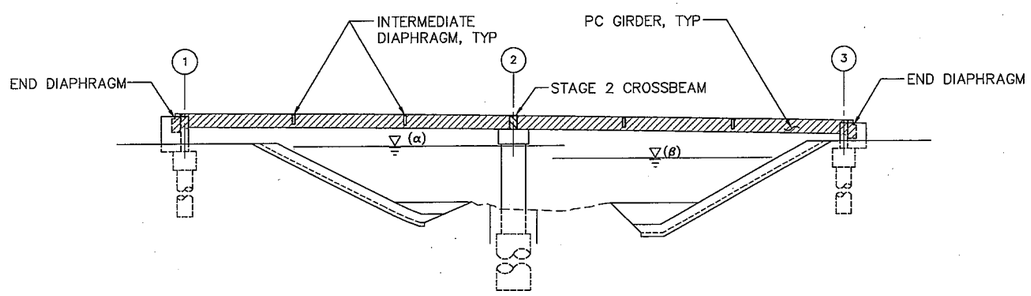

STAGE C – PART 1

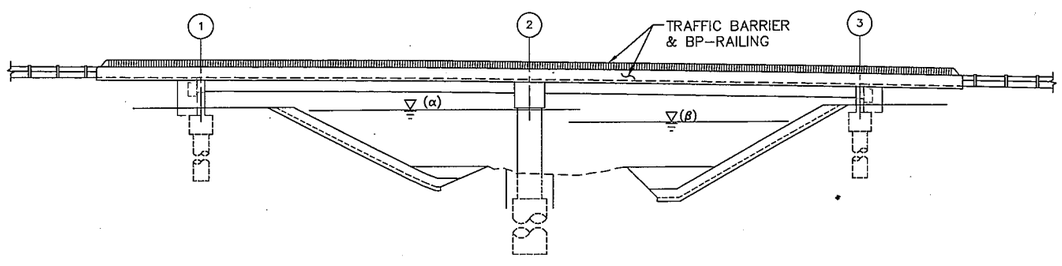

STAGE C – PART 2

CONSTRUCTION SEQUENCE:

(A) CONSTRUCTION PRIOR TO JULY 1, 2010

THIS STAGE COVERS THE CONSTRUCTION FOR THE REMOVAL/RE-ROUTING OF THE EXISTING BRIDGE SUPPORTED UTILITIES, THE REMOVAL OF THE EXISTING STEEL TRUSS BRIDGE AND PIERS, AND THE CONSTRUCTION OF THE ABUTMENTS (PIERS 1 & 3).

1. PREPARE AND SUBMIT A DEMOLITION PLAN FOR REVIEW IN ACCORDANCE WITH THE SPECIAL PROVISIONS "REMOVAL OF STRUCTURES AND OBSTRUCTIONS".
2. REMOVE EXISTING NEWAUKUM RIVER STEEL TRUSS BRIDGE IN ACCORDANCE WITH THE SPECIAL PROVISIONS "REMOVAL OF STRUCTURES AND OBSTRUCTIONS" AND THE REVIEWED DEMOLITION PLANS.
3. REMOVE THE EXISTING PIER FOUNDATIONS AND REGRADE SLOPE IN ACCORDANCE WITH THE SPECIAL PROVISIONS "REMOVAL OF STRUCTURES AND OBSTRUCTIONS" AND AS SHOWN ON THE CIVIL SHEETS.
4. CONSTRUCT PIERS 1 & 3 SHAFTS, CAP BEAM, PIER WALL, AND STUB WALLS.

(B) CONSTRUCTION BETWEEN JULY 1, 2010 AND SEPTEMBER 30, 2010

THIS STAGE COVERS ALL WORK TO BE DONE WITHIN THE WETTED PERIMETER OF THE ORDINARY HIGH WATER (ELEV. 250.20). ALL WORK BELOW THE ORDINARY HIGH WATER MUST BE COMPLETED BETWEEN THE AFOREMENTIONED DATES.

1. BUILD WORK PLATFORM FOR PIER 2 CONSTRUCTION, SEE DRAWING S-24. WORK PLATFORM SHALL BE BUILT IN ACCORDANCE WITH THE SPECIAL PROVISIONS "TEMPORARY WORK PLATFORM".
2. CONSTRUCT PIER 2 SHAFT, COLUMN, AND STAGE 1 CROSSBEAM.
3. REMOVE WORK PLATFORM IN ACCORDANCE WITH THE SPECIAL PROVISIONS "TEMPORARY WORK PLATFORM".
4. PERFORM RIP-RAP ARMOR AND QUARRY SPALL CONSTRUCTION WITHIN THE WETTED PERIMETER OF THE ORDINARY HIGH WATER.

(C) CONSTRUCTION POST SEPTEMBER 30, 2010

THIS STAGE COVERS THE CONSTRUCTION OF THE REMAINDER OF THE BRIDGE AND THE CONSTRUCTION OF THE BRIDGE APPROACHES.

1. ERECT PRECAST GIRDERS, CONSTRUCT END AND INTERMEDIATE DIAPHRAGMS, CONSTRUCT PIER 2 STAGE 2 CROSSBEAM, AND CONSTRUCT ABUTMENT GIRDER STOPS.
2. CAST TRAFFIC BARRIER, CAST APPROACH SLABS, PLACE HMA OVERLAY, AND INSTALL BP RAILING.
3. CONSTRUCT BRIDGE APPROACHES AND ASSOCIATED COMPONENTS IN ACCORDANCE WITH THE SPECIAL PROVISIONS AND THE CIVIL SHEETS.

LEGEND:

(1) PIER 1 – NORTH ABUTMENT (JULY 1, 2010)
(2) PIER 2 – (JULY 1 2010 AND SEPTEMBER 30, 2010)
(3) PIER 3 – SOUTH ABUTMENT (JULY 1, 2010)

α – 100 YEAR FLOOD LINE (ELEV=259.0)

β – ORDINARY HIGH WATERLINE (ELEV=250.20)

WORK BEING COMPLETED

NOTES:

1. THE PROPOSED SEQUENCE SHOWN ON THIS SHEET REPRESENTS TO THE CONTRACTOR ONE POSSIBLE SCHEME. THE CONTRACTOR SHALL SUBMIT PROPOSED CONSTRUCTION METHODS AND SEQUENCE TO THE ENGINEER FOR APPROVAL PRIOR TO THE START OF THE CONSTRUCTION.
2. CONSTRUCTION STAGING SCHEMATICS ARE DRAWN LOOKING ALONG BEARING N37°46'39"E.
3. EXISTING STREAMBED GRAVEL IS TO BE RESTORED AFTER RIP-RAP ARMOR IS INSTALLED.
4. DEPENDING ON THE CONTRACTOR'S SEQUENCE OF WORK, IF THE CONTRACTOR IS CONSTRUCTING THE SE WALLS BEFORE THE ERECTION OF THE GIRDERS, THEN THE CONTRACTOR SHALL CONSIDER THE TEMPORARY CONSTRUCTION LOADS ON THE SE WALLS DUE TO CONSTRUCTION CRANE, GIRDERS, AND SUPPORT EQUIPMENT.

MARK	REVISION DESCRIPTION	BY	APP.	DATE

BergerABAM
33301 9th Avenue South, Suite 300
Federal Way, Washington 98003-2600
(206) 431-2300 Fax: (206) 431-2250

Lewis County Department of Public Works

CHARLES W. SPRY, STATE OF WASHINGTON, 21872, STRUCTURAL ENGINEER, PROFESSIONAL ENGINEER, 12-16-09

LEWIS COUNTY DEPT. OF PUBLIC WORKS
ENGINEER DATE

DRAWN BY LWC
DESIGN BY GAB
CHECK BY CWS
PROJ MGR CWS

LEWIS COUNTY DEPARTMENT OF PUBLIC WORKS
NEWAUKUM BRIDGE NO. 20 REPLACEMENT PROJECT

GENERAL STRUCTURAL NOTES & CONSTRUCTION SEQUENCE

DRAWING NO. S-2
PROJECT NO. CRP 2072
FED AID NO. BRS-5667(002)
DATE: 12/15/09
SHEET NO. 24 OF 46

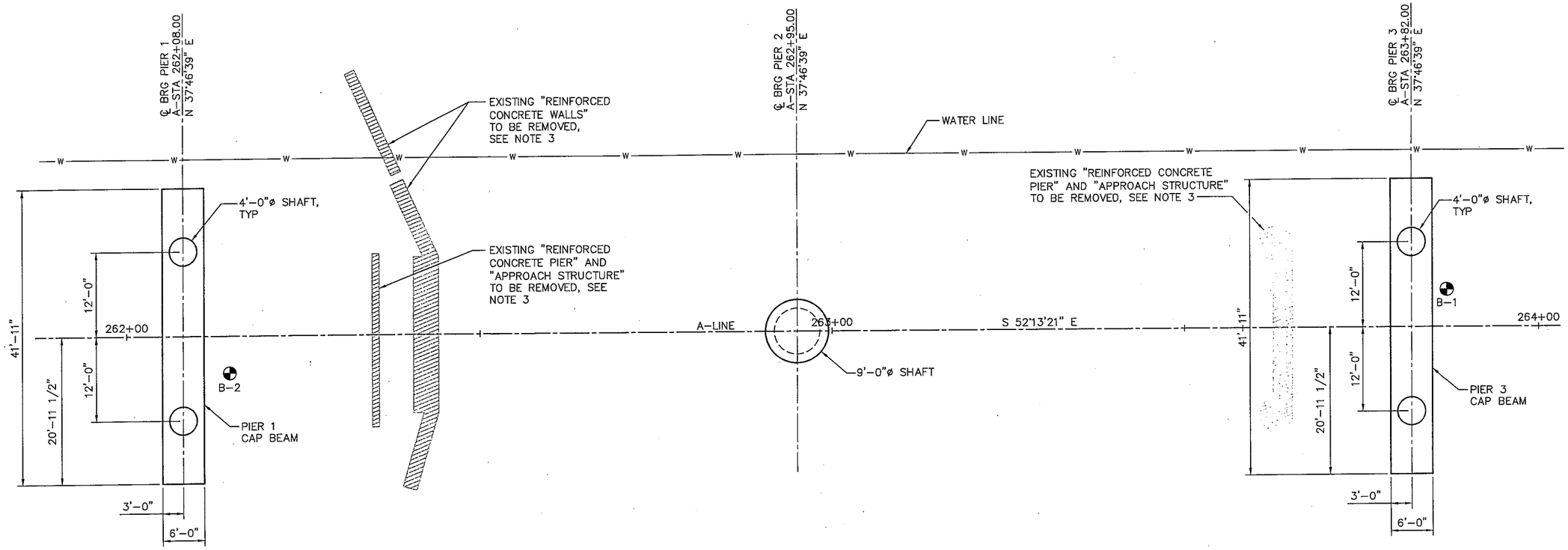

NOMINAL SHAFT CAPACITIES (KIPS)				
PIER NO	END BEARING		SKIN FRICTION	
	SERVICE 1 LIMIT STATE	STRENGTH AND EXTREME EVENT 1 LIMIT STATE	SERVICE 1 LIMIT STATE	STRENGTH AND EXTREME EVENT 1 LIMIT STATE
1	373	1118	538	807
2	1887	5662	1413	2119
3	373	1118	538	807

FOUNDATION LAYOUT

SCALE: 1/8" = 1'-0"

NOTES:

1. FOR BORING LOGS, SEE GEOTECHNICAL REPORT.
2. SEE DWGS S-4 & S-5 FOR DRILLED SHAFT LENGTHS.
3. EXISTING PIERS AND WALLS SHALL BE REMOVED TO 2 FEET BELOW THE FINAL GROUND LINE. REMOVAL SHALL COMPLY WITH THE SPECIAL PROVISIONS. CONTRACTOR TO FIELD VERIFY ALL SITE CONDITIONS PRIOR TO BID.

MARK	REVISION DESCRIPTION	BY	APP.	DATE

BergerABAM
33301 9th Avenue South, Suite 300
Federal Way, Washington 98003-2600
(206) 431-2300 Fax: (206) 431-2250

Lewis County Department of Public Works

CHARLES W. SPRY, STATE OF WASHINGTON, 21872, STRUCTURAL ENGINEER, PROFESSIONAL ENGINEER, 12-16-09

LEWIS COUNTY DEPT. OF PUBLIC WORKS

ENGINEER DATE

DRAWN BY LWC
DESIGN BY GAB
CHECK BY CWS
PROJ MGR CWS

LEWIS COUNTY DEPARTMENT OF PUBLIC WORKS
NEWAUKUM BRIDGE NO. 20 REPLACEMENT PROJECT

FOUNDATION LAYOUT

DRAWING NO. S-3
PROJECT NO. CRP 2072
FED AID NO. BRS-5667(002)
DATE: 12/15/09
SHEET NO. 25 OF 46

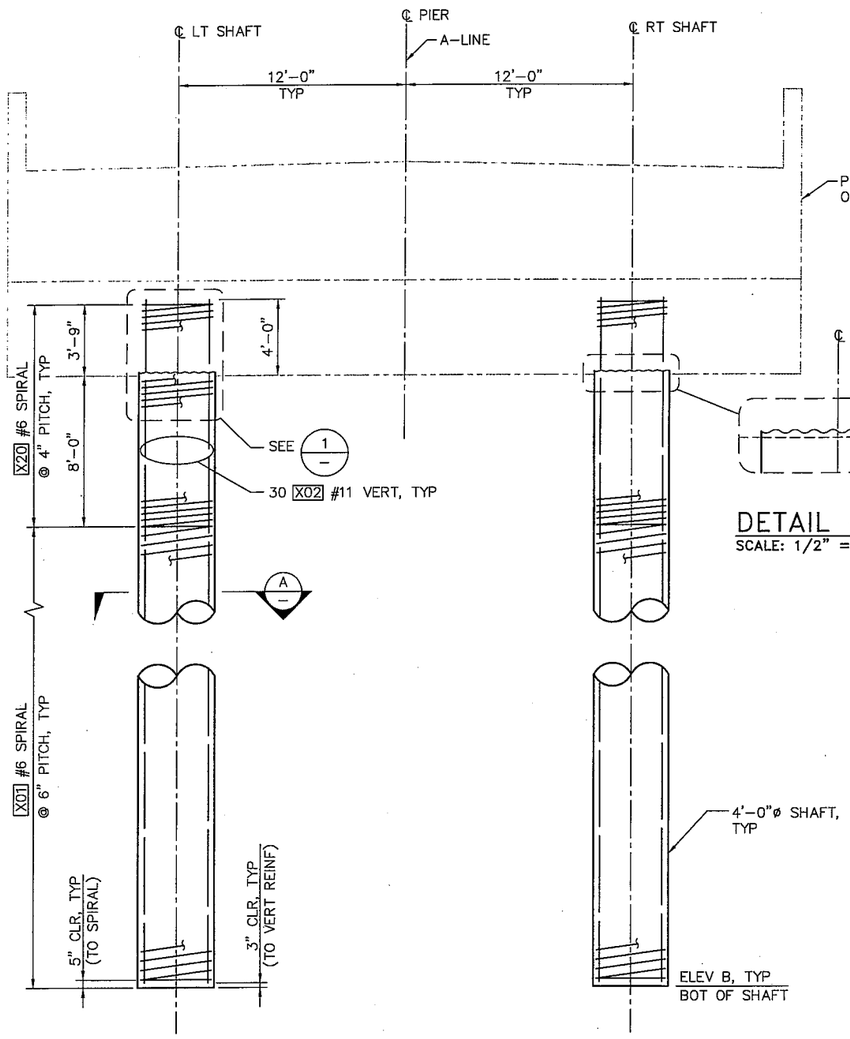

ELEVATION – PIERS 1 & 3 SHAFTS

SCALE: 1/4"=1'-0" (LOOKING AHEAD ON STATION, NORMAL TO A-LINE)

LT = LEFT
RT = RIGHT

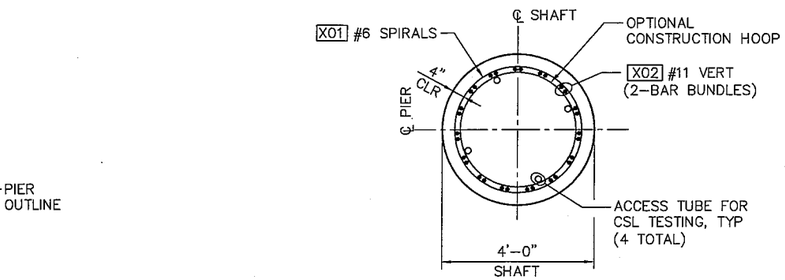

DETAIL – SHAFT EMBED

SCALE: 1/2" = 1'-0"

A/– SECTION – SHAFTS

SCALE: 1/2" = 1'-0"

SHAFT ELEVATIONS (FEET)		
PIER	ELEV A	ELEV B
1	253.25	215.00
3	253.25	215.00

NOTES:

1. AT THE TOP AND BOTTOM ENDS OF THE SHAFT SPIRAL REINFORCEMENT WELD END OF SPIRAL BACK ONTO ITSELF. SEE SPIRAL WELD DETAIL 2/–
2. SPIRAL REINFORCEMENT FOR SHAFTS SHALL BE DEFORMED #6 3/4"ø PLAIN STEEL BARS (AASHTO M31 GR 60), W44 COLD DRAWN WIRE (AASHTO M32), OR D44 DEFORMED WIRE (AASHTO M255),
3. THE CONTRACTOR SHALL PROVIDE 2 FEET EXTRA LENGTH OF SHAFT REINFORCEMENT CAGE AT THE TOP TO ACCOMMODATE UNFORESEEN FIELD CONDITIONS. AFTER CONCRETE IS POURED, ADDITIONAL CAGE LENGTH NOT REQUIRED SHALL BE FIELD CUT AND TERMINATED PER NOTE 1.
4. A BREAK IN SPIRAL REINFORCEMENT AT THE SOFFIT OF CAP BEAM IS ALLOWED FOR PLACEMENT OF CAP BEAM BOTTOM MAT REINFORCEMENT, SEE DETAIL 1/–
5. NO VERTICAL SPLICES ARE PERMITTED IN THE VERTICAL LONGITUDINAL SHAFT BARS.
6. THE "X" IN THE REINFORCEMENT CALLOUTS IS TO BE REPLACED BY THE PIER NUMBER.

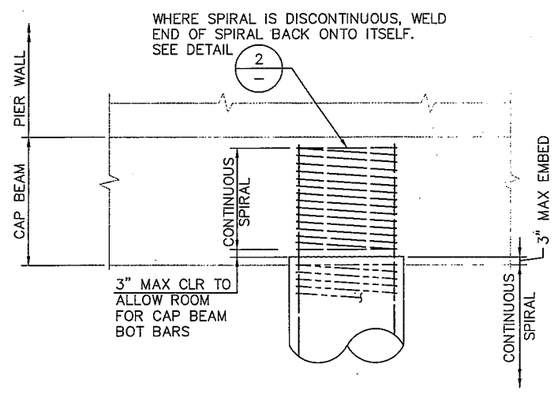

1/– DETAIL – SPIRAL DISCONTINUITY

SCALE: 3/8"=1'-0" AT SOFFIT OF CAP BEAM

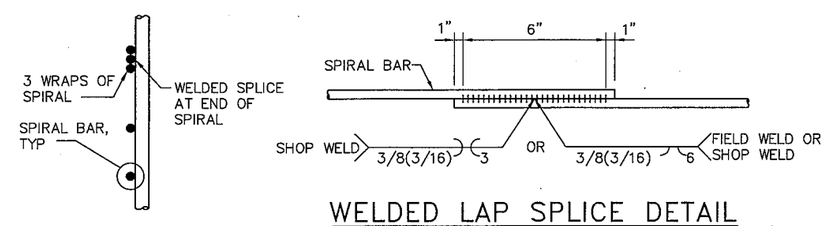

WELDED LAP SPLICE DETAIL

WELDING SHALL MEET THE REQUIREMENTS OF STD. SPEC. 6-02.3(24)E

2/– DETAIL – SPIRAL TERMINATION

SCALE: NTS

MARK	REVISION DESCRIPTION	BY	APP.	DATE

BergerABAM
33301 9th Avenue South, Suite 300
Federal Way, Washington 98003-2600
(206) 431-2300 Fax: (206) 431-2250

Lewis County Department of Public Works

CHARLES W. SPRY, STATE OF WASHINGTON, 21872, STRUCTURAL ENGINEER, PROFESSIONAL ENGINEER 12-16-09

LEWIS COUNTY DEPT. OF PUBLIC WORKS
ENGINEER DATE

DRAWN BY LWC
DESIGN BY GAB
CHECK BY CWS
PROJ MGR CWS

LEWIS COUNTY DEPARTMENT OF PUBLIC WORKS
NEWAUKUM BRIDGE NO. 20 REPLACEMENT PROJECT

DRILLED SHAFTS DETAILS
PIERS 1 & 3

DRAWING NO. **S-4**
PROJECT NO. CRP 2072
FED AID NO. BRS-5667(002)
DATE: 12/15/09
SHEET NO. 26 OF 46

COLUMN & SHAFT ELEVATIONS (FEET)			
COL/SHAFT	ELEV A	ELEV B	ELEV C
PIER 2	258.19	235.00	190.00

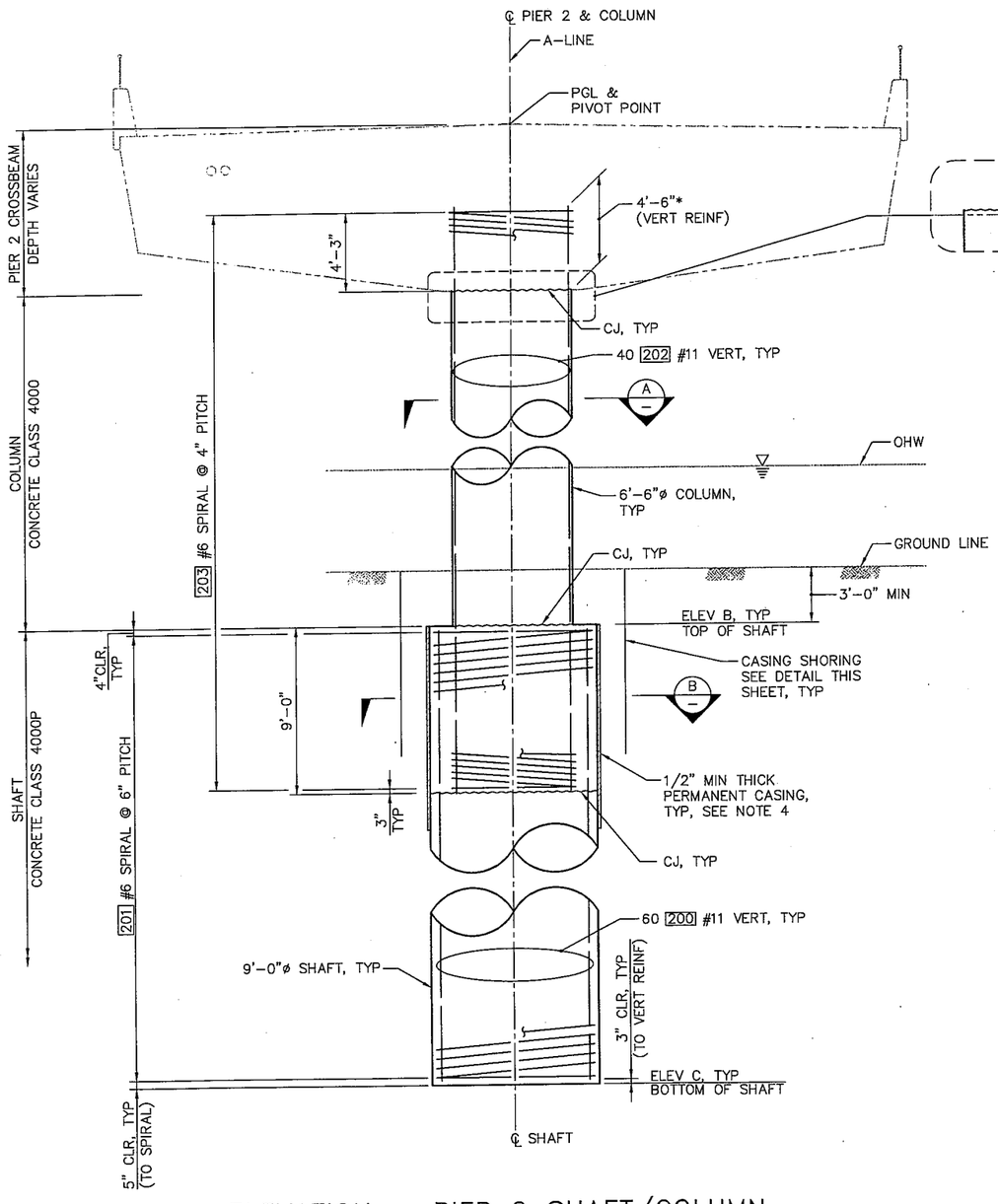

ELEVATION – PIER 2 SHAFT/COLUMN
SCALE: 1/4"=1'–0" (LOOKING AHEAD ON STATION NORMAL TO A–LINE)

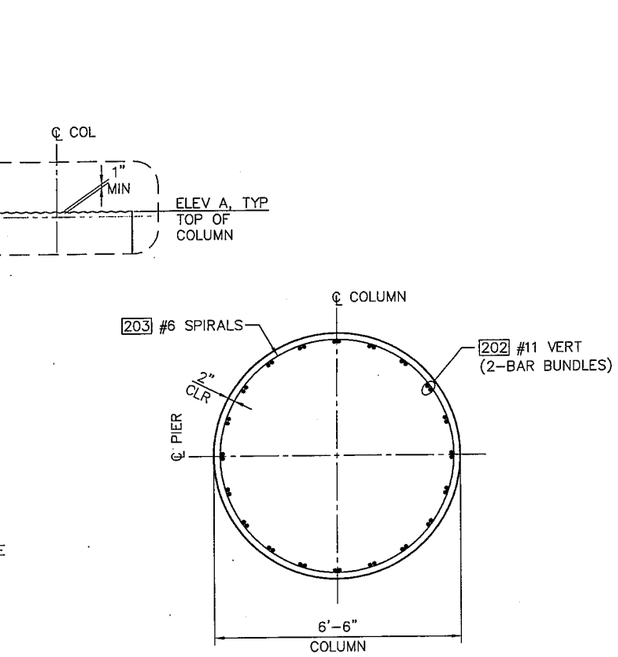

A
SECTION – COLUMN
SCALE: 1/2" = 1'–0"

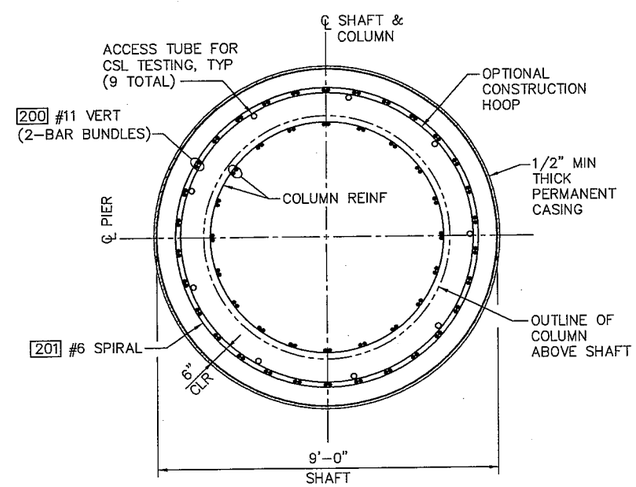

B
SECTION – SHAFT
SCALE: 1/2" = 1'–0"

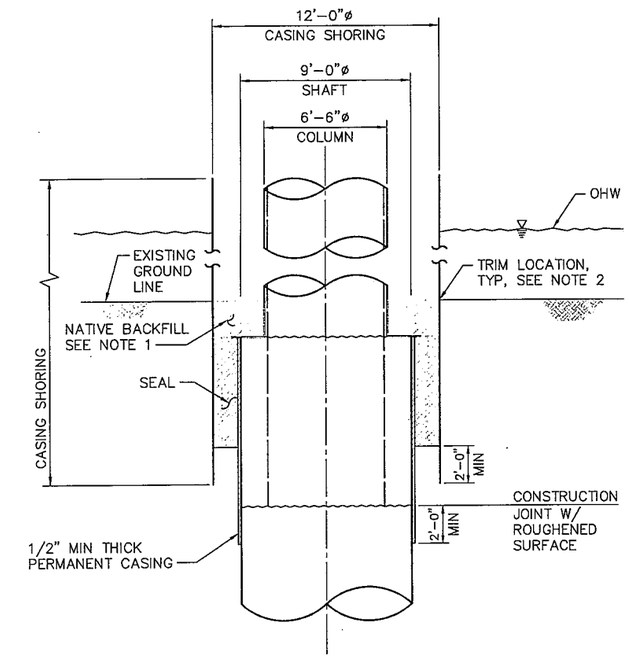

DETAIL – CASING SHORING
SCALE: 1/4"=1'–0"

NOTES:

1. BACKFILL AROUND/COLUMN SHAFT WITHIN THE CASING SHORING LIMITS UP TO THE EXISTING GROUND LINE. USE THE NATIVE EXCAVATED MATERIAL FOR BACKFILL.
2. AFTER THE COLUMN HAS BEEN CONSTRUCTED, AND THE CASING SHORING BACKFILLED UP TO THE EXISTING GROUND LINE, THE PORTION OF THE CASING SHORING ABOVE THE EXISTING GROUND LINE SHALL BE REMOVED BY METHODS PROPOSED BY THE CONTRACTOR AND APPROVED BY THE ENGINEER.
3. SEE NOTES AND DETAILS ON DWG S–4.
4. PERMANENT CASING SHALL BE CONTINUOUS, OR USE WELDED SEGMENTS WITH FULL PENETRATION WELDS.

* MEASURED FROM TOP OF COLUMN

MARK	REVISION DESCRIPTION	BY	APP.	DATE

BergerABAM
33301 9th Avenue South, Suite 300
Federal Way, Washington 98003-2600
(206) 431-2300 Fax: (206) 431-2250

Lewis County Department of Public Works

CHARLES W. SPRY, STATE OF WASHINGTON, 31872, PROFESSIONAL ENGINEER, 12-2-09

LEWIS COUNTY DEPT. OF PUBLIC WORKS

ENGINEER DATE

DRAWN BY LWC
DESIGN BY GAB
CHECK BY CWS
PROJ MGR CWS

LEWIS COUNTY DEPARTMENT OF PUBLIC WORKS
NEWAUKUM BRIDGE NO. 20 REPLACEMENT PROJECT

DRILLED SHAFT & COLUMN DETAILS
PIER 2

DRAWING NO. S-5
PROJECT NO. CRP 2072
FED AID NO. BRS-5667(002)
DATE: 12/15/09
SHEET NO. 27 OF 46

TOP OF GROUT PAD ELEVATIONS (FEET)*							
GIRDER	G1	G2	G3	G4	G5	G6	G7
SPAN 1 ELEVATION	263.88	264.00	264.12	264.24	264.12	264.00	263.88

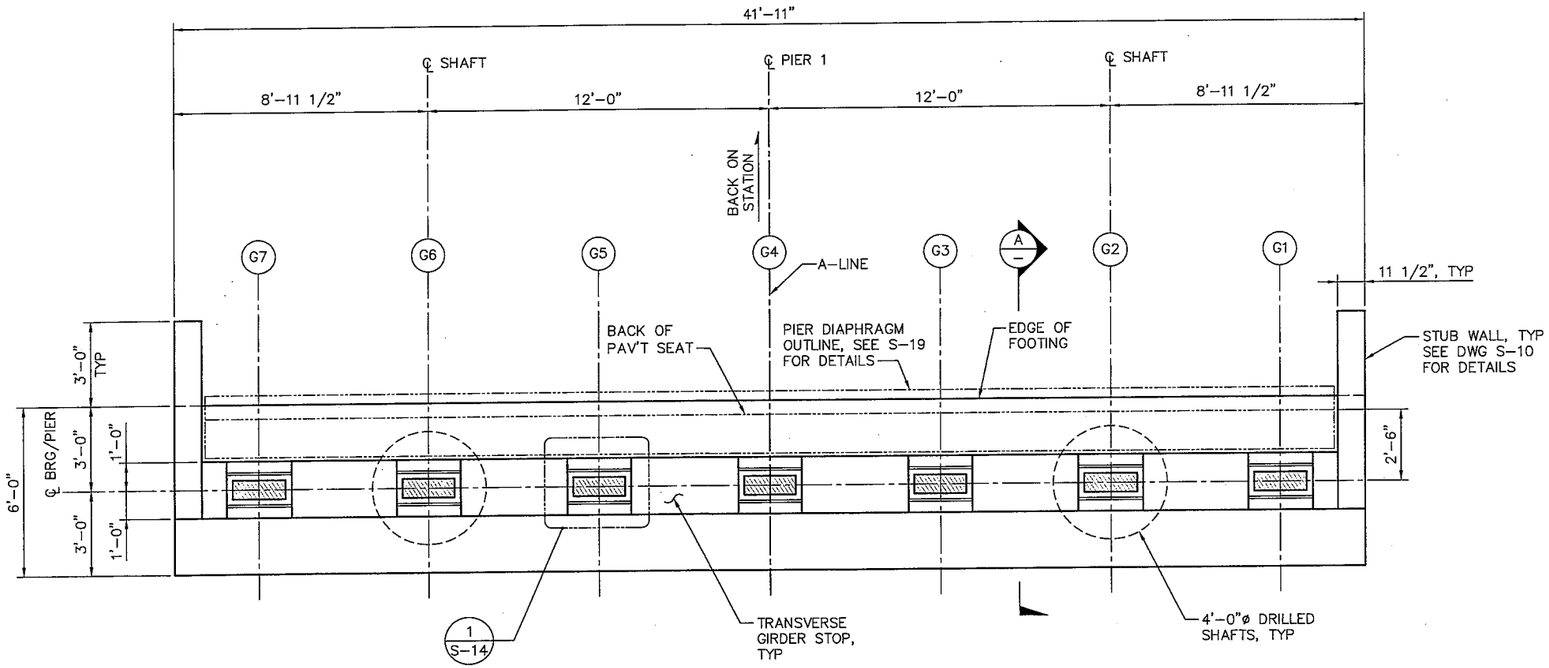

PLAN – PIER 1
SCALE: 3/8"=1'-0"

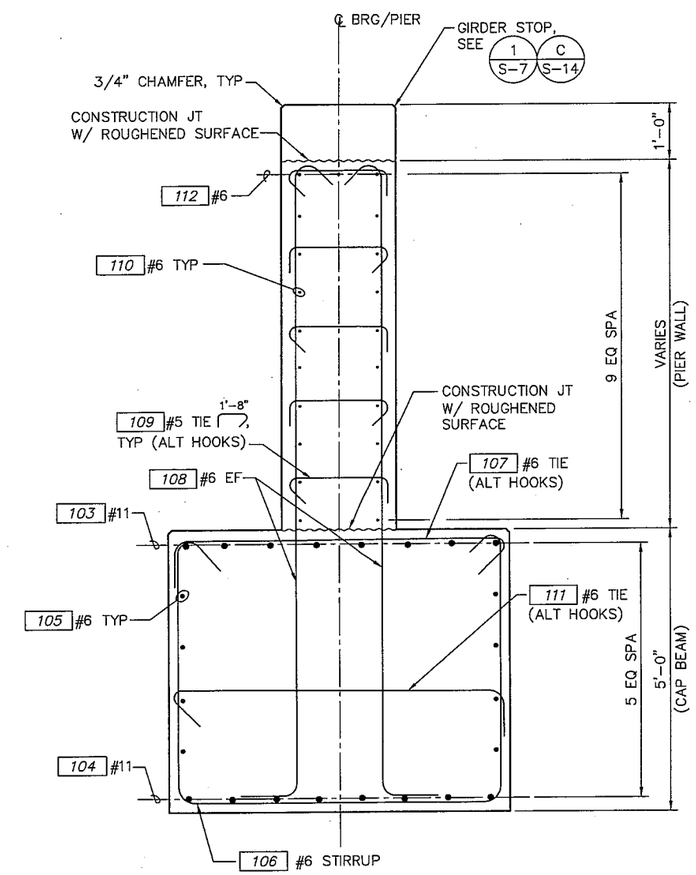

A –,S-7 SECTION
SCALE: 3/4"=1'-0"

NOTES:

1. FOR TRANSVERSE GIRDER STOP DETAILS SEE DWG S-7.
2. ALL PIER 1 CONCRETE SHALL BE PAID FOR AS CONCRETE CLASS 4000 FOR BRIDGE.
3. SEE DWG S-15 FOR SUPERSTRUCTURE FRAMING PLAN AND CROSS SECTION

EA = EACH
EF = EACH FACE
FF = FAR FACE

MARK	REVISION DESCRIPTION	BY	APP.	DATE

BergerABAM
33301 9th Avenue South, Suite 300
Federal Way, Washington 98003-2600
(206) 431-2300 Fax: (206) 431-2250

Lewis County Department of Public Works

CHARLES W. SPRY, STATE OF WASHINGTON, 21872, STRUCTURAL ENGINEER, PROFESSIONAL ENGINEER, 12-16-09

LEWIS COUNTY DEPT. OF PUBLIC WORKS
ENGINEER DATE

DRAWN BY LWC
DESIGN BY GAB
CHECK BY CWS
PROJ MGR CWS

LEWIS COUNTY DEPARTMENT OF PUBLIC WORKS
NEWAUKUM BRIDGE NO. 20 REPLACEMENT PROJECT

PIER 1
PLAN & SECTION

DRAWING NO. **S-6**
PROJECT NO. CRP 2072
FED AID NO. BRS-5667(002)
DATE: 12/15/09
SHEET NO. 28 OF 46

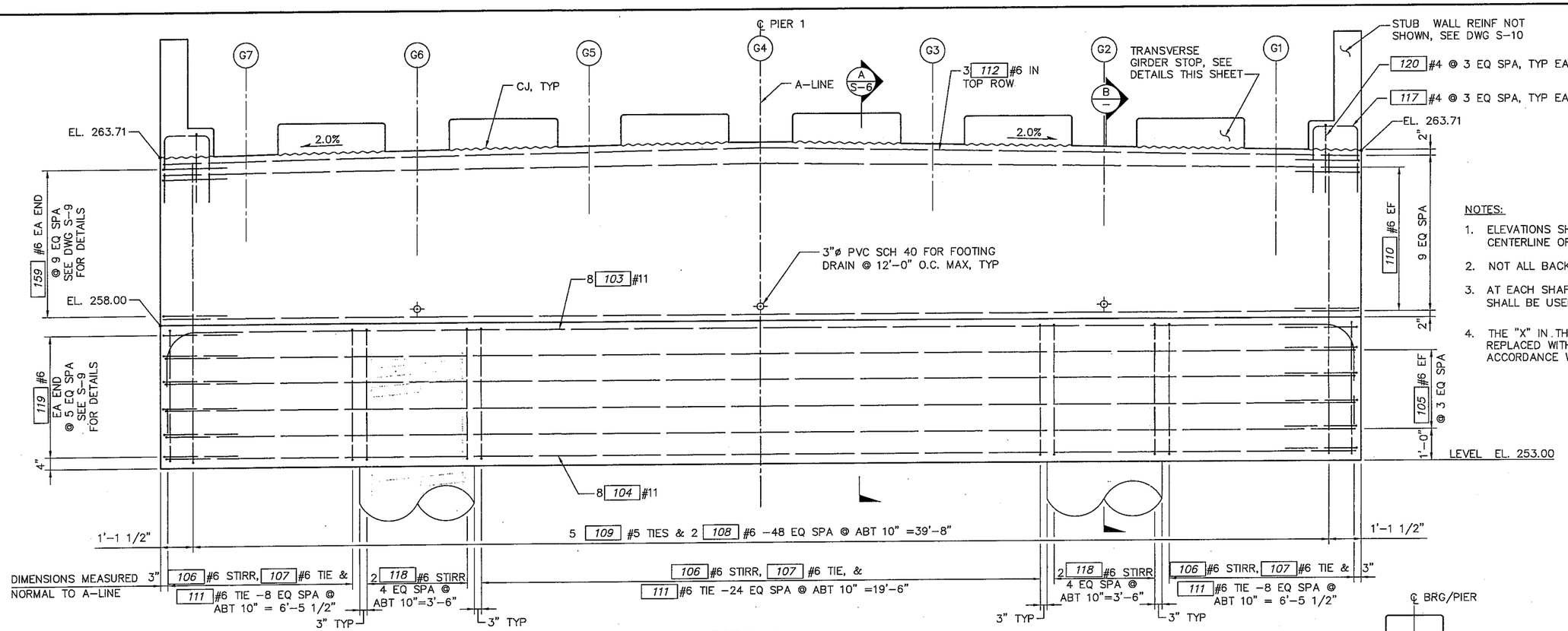

ELEVATION – PIER 1

SCALE: 1/2" = 1'-0" (LOOKING BACK ON STATION, NORMAL TO A-LINE)

NOTES:

1. ELEVATIONS SHOWN ARE MEASURED ALONG THE CENTERLINE OF BEARING.
2. NOT ALL BACKWALL REINF SHOWN FOR CLARITY.
3. AT EACH SHAFT LOCATION, 2 X18 #6 STIRRUPS SHALL BE USED IN-LIEU OF THE X06 #6 STIRRUPS.
4. THE "X" IN THE REINF CALLOUTS SHALL BE REPLACED WITH A VALUE OF 1 OR 3 IN ACCORDANCE WITH THE PIER NUMBER.

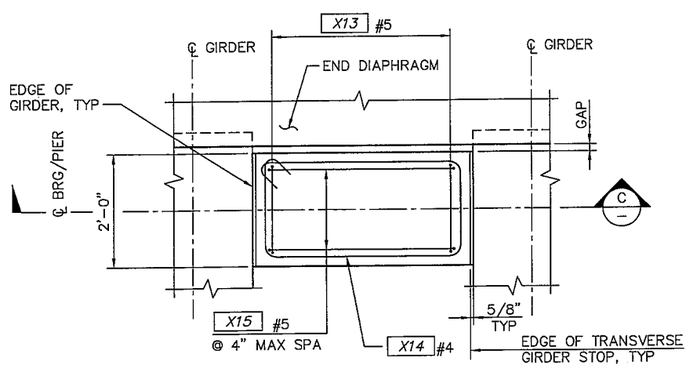

1 S-6,S-8 PLAN – GIRDER STOP

SCALE: NTS

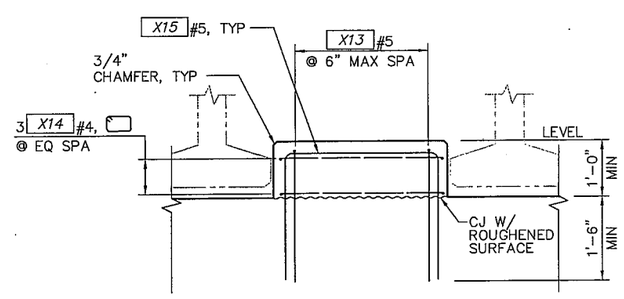

C – SECTION – GIRDER STOP

SCALE: NTS

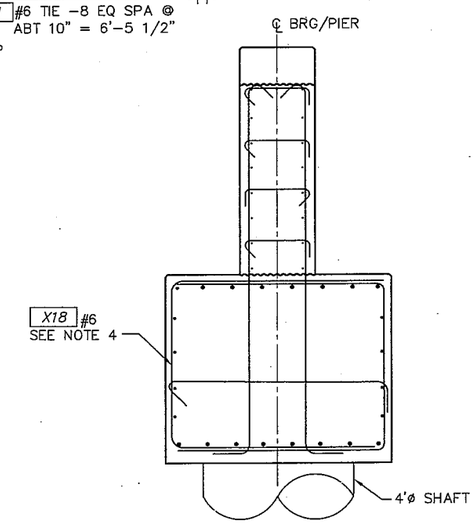

B S-9 SECTION @ SHAFT

SCALE: 1/2"=1'-0"

FOR REINF CALLOUTS NOT SHOWN, SEE A S-6 OR A S-8

MARK	REVISION DESCRIPTION	BY	APP.	DATE

BergerABAM
33301 9th Avenue South, Suite 300
Federal Way, Washington 98003-2600
(206) 431-2300 Fax: (206) 431-2250

Lewis County Department of Public Works

CHARLES W. SPRY, STATE OF WASHINGTON, 21872, STRUCTURAL ENGINEER, PROFESSIONAL ENGINEER

LEWIS COUNTY DEPT. OF PUBLIC WORKS
ENGINEER DATE

DRAWN BY LWC
DESIGN BY GAB
CHECK BY CWS
PROJ MGR CWS

LEWIS COUNTY DEPARTMENT OF PUBLIC WORKS
NEWAUKUM BRIDGE NO. 20 REPLACEMENT PROJECT

PIER 1
ELEVATION & DETAILS

DRAWING NO. S-7
PROJECT NO. CRP 2072
FED AID NO. BRS-5667(002)
DATE: 12/15/09
SHEET NO. 29 OF 46

TOP OF GROUT PAD ELEVATIONS (FEET)*							
GIRDER	G1	G2	G3	G4	G5	G6	G7
SPAN 2 ELEVATION	261.38	261.50	261.62	261.74	261.62	261.50	261.38

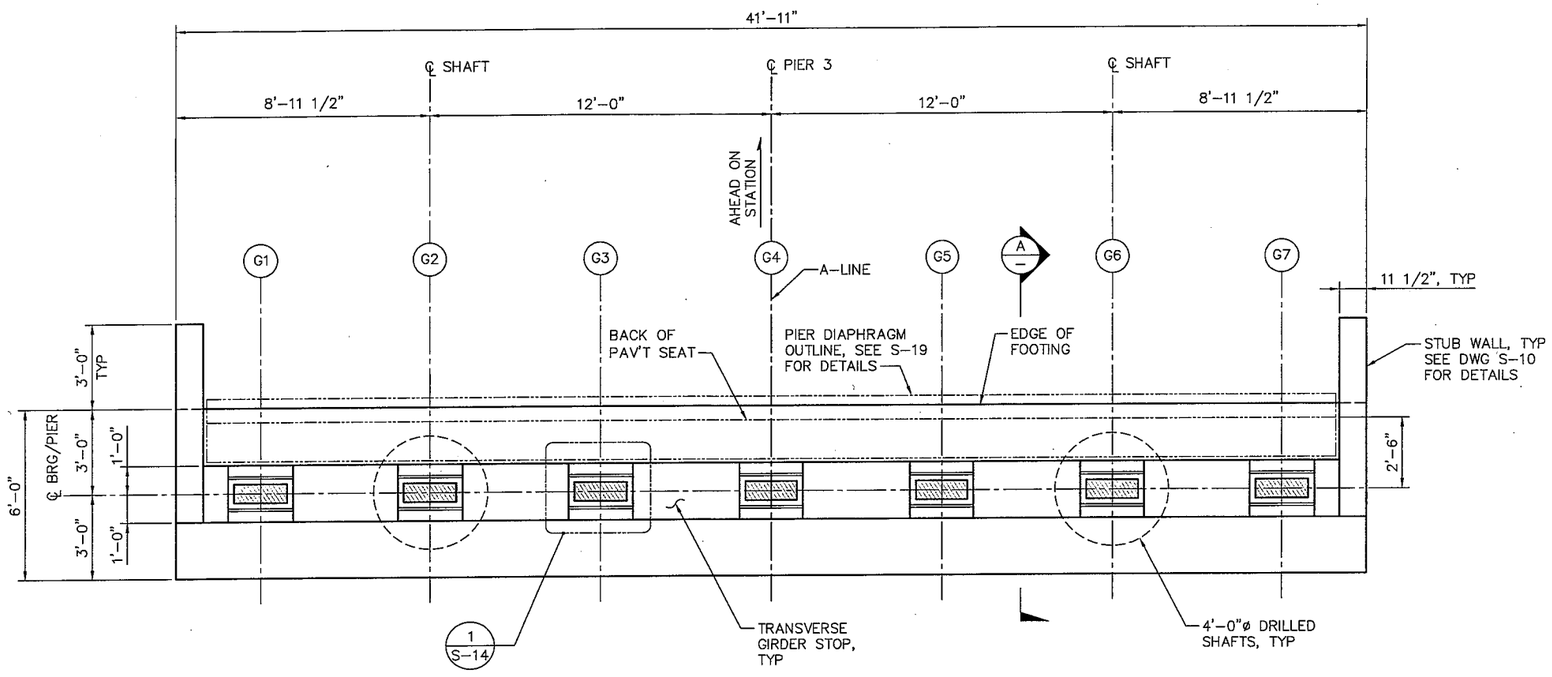

PLAN – PIER 3
SCALE: 3/8"=1'-0"

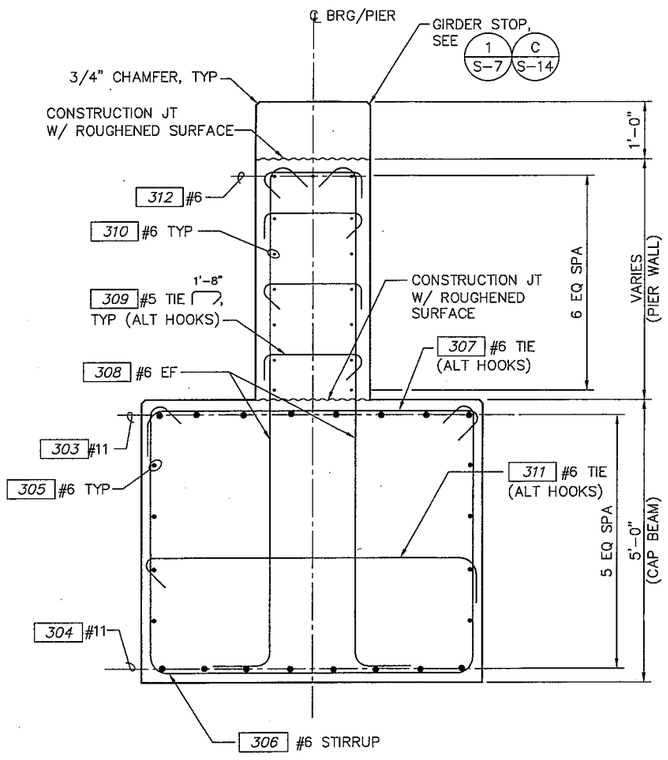

A
–
SECTION
SCALE: 3/4"=1'-0"

NOTES:

1. FOR TRANSVERSE GIRDER STOP DETAILS SEE DWG S-7.
2. ALL PIER 3 CONCRETE SHALL BE PAID FOR AS CONCRETE CLASS 4000 FOR BRIDGE.
3. SEE DWG S-15 FOR SUPERSTRUCTURE FRAMING PLAN AND CROSS SECTION

EA = EACH
EF = EACH FACE
FF = FAR FACE

MARK	REVISION DESCRIPTION	BY	APP.	DATE

BergerABAM
33301 9th Avenue South, Suite 300
Federal Way, Washington 98003-2600
(206) 431-2300 Fax: (206) 431-2250

Lewis County Department of Public Works

CHARLES W. SPAY, STATE OF WASHINGTON, 21872, STRUCTURAL ENGINEER, PROFESSIONAL ENGINEER, 12-16-09

LEWIS COUNTY DEPT. OF PUBLIC WORKS
ENGINEER 12/16/09 DATE

DRAWN BY LWC
DESIGN BY GAB
CHECK BY CWS
PROJ MGR CWS

LEWIS COUNTY DEPARTMENT OF PUBLIC WORKS
NEWAUKUM BRIDGE NO. 20 REPLACEMENT PROJECT

PIER 3
PLAN & SECTION

DRAWING NO. **S-8**
PROJECT NO. CRP 2072
FED AID NO. BRS-5667(002)
DATE: 12/15/09
SHEET NO. 30 OF 46

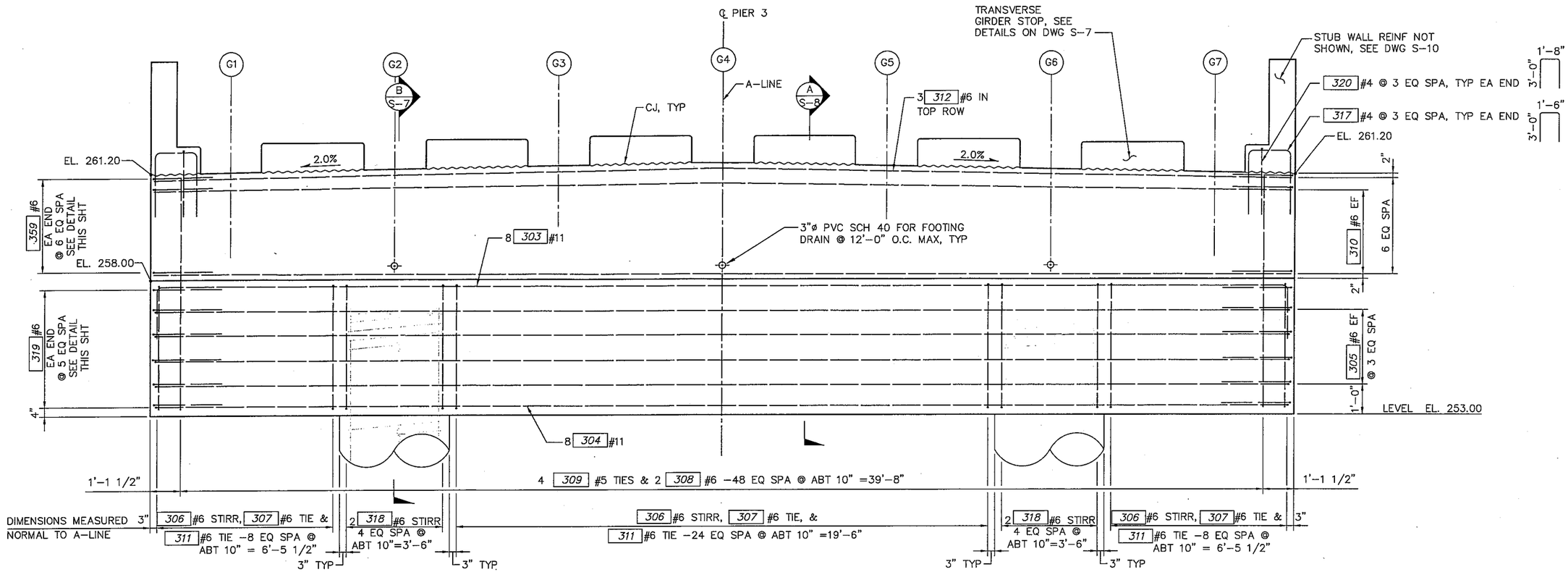

ELEVATION – PIER 3

SCALE: 1/2"=1'-0" (LOOKING AHEAD ON STATION, NORMAL TO A-LINE)

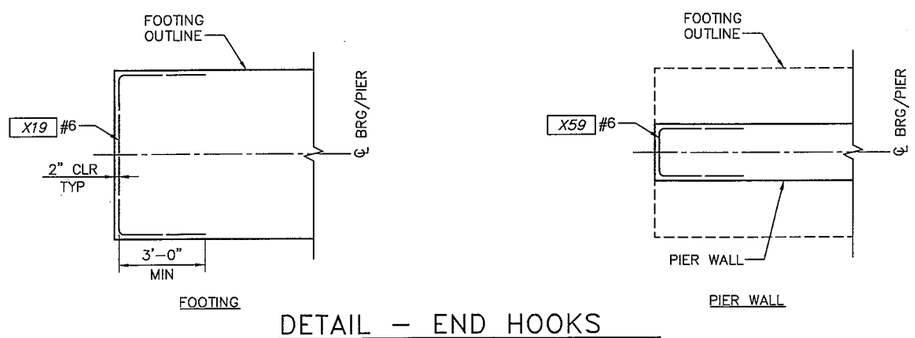

DETAIL – END HOOKS

SCALE: 3/8"=1'-0" (PIER 3 SHOWN, PIER 1 SIM)

NOTES:

1. ELEVATIONS SHOWN ARE MEASURED ALONG THE CENTERLINE OF BEARING.
2. NOT ALL BACKWALL REINF SHOWN.
3. AT EACH SHAFT LOCATION, 2 X18 #6 STIRRUPS SHALL BE USED IN-LIEU OF THE X06 #6 STIRRUPS.
4. THE "X" IN THE REINF CALLOUTS SHALL BE REPLACED WITH A VALUE OF 1 OR 3 IN ACCORDANCE WITH THE PIER NUMBER.

MARK	REVISION DESCRIPTION	BY	APP.	DATE

BergerABAM
33301 9th Avenue South, Suite 300
Federal Way, Washington 98003-2600
(206) 431-2300 Fax: (206) 431-2250

Lewis County Department of Public Works

CHARLES W. SPAY, STATE OF WASHINGTON, 21872, STRUCTURAL ENGINEER, PROFESSIONAL ENGINEER, 12-16-09

LEWIS COUNTY DEPT. OF PUBLIC WORKS
ENGINEER DATE

DRAWN BY LWC
DESIGN BY GAB
CHECK BY CWS
PROJ MGR CWS

LEWIS COUNTY DEPARTMENT OF PUBLIC WORKS
NEWAUKUM BRIDGE NO. 20 REPLACEMENT PROJECT

PIER 3
ELEVATION & DETAILS

DRAWING NO. **S-9**
PROJECT NO. CRP 2072
FED AID NO. BRS-5667(002)
DATE: 12/15/09
SHEET NO. 31 OF 46

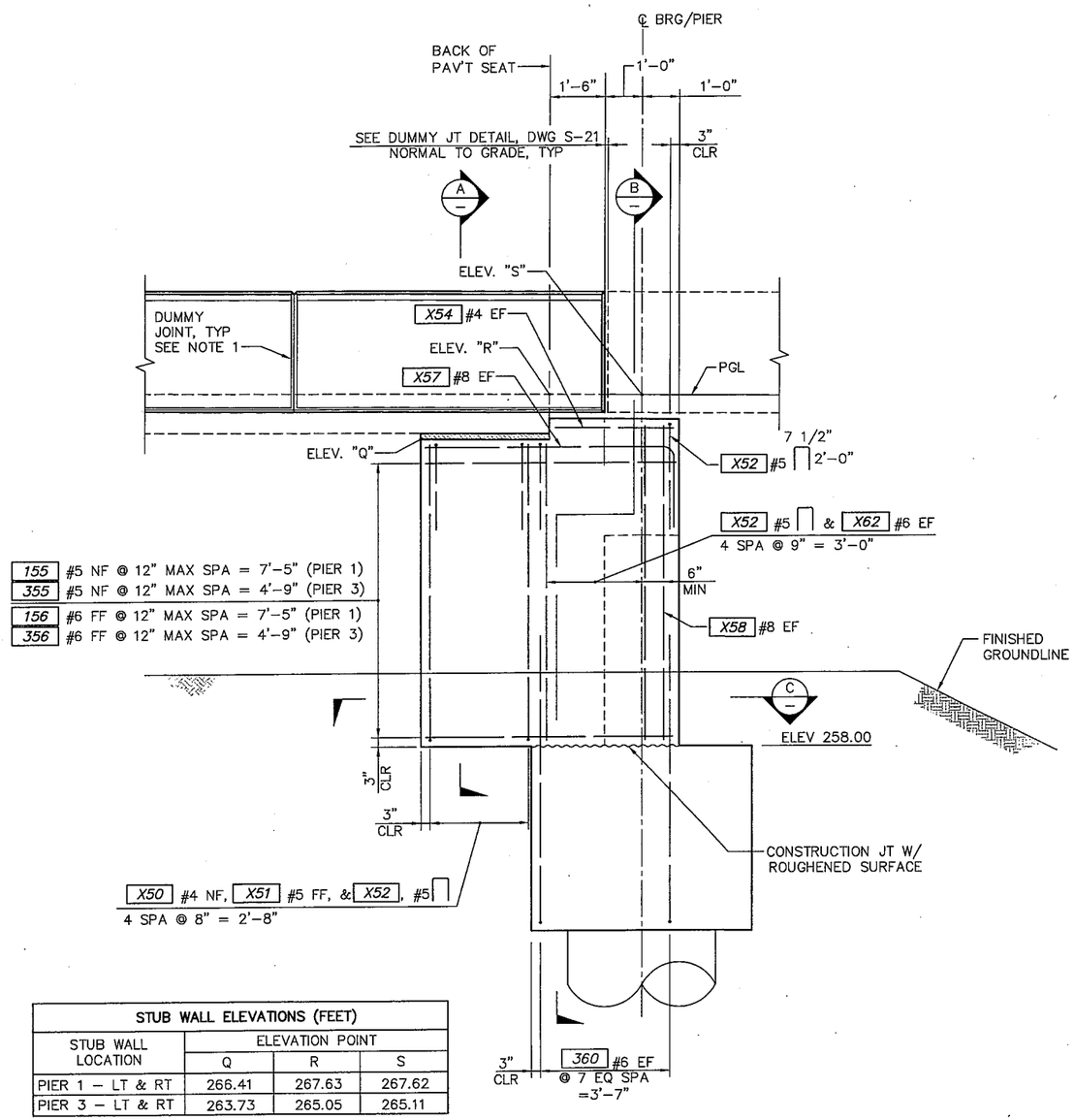

STUB WALL ELEVATIONS (FEET)			
STUB WALL LOCATION	ELEVATION POINT		
	Q	R	S
PIER 1 – LT & RT	266.41	267.63	267.62
PIER 3 – LT & RT	263.73	265.05	265.11

ELEVATION – PIER 1

SCALE: 1/2"=1'-0"
(PIER 1 SHOWN, PIER 3 SIMILAR)
(RT WALL SHOWN, LT SIMILAR)

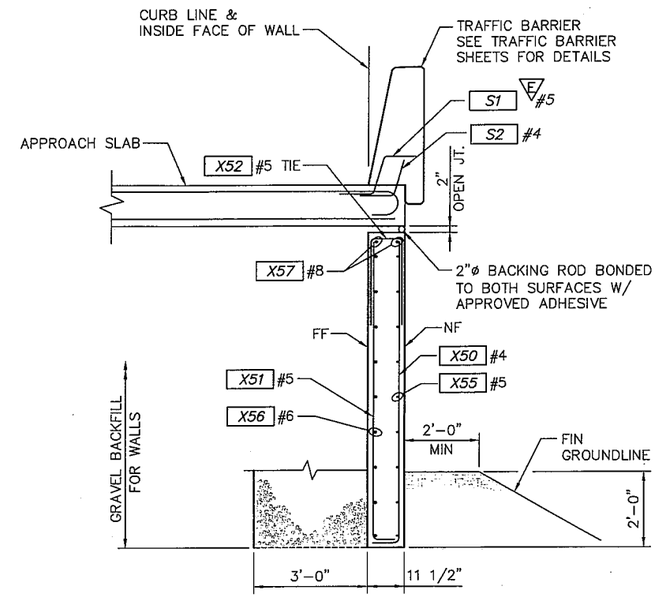

A SECTION

SCALE: 1/2"=1'-0"

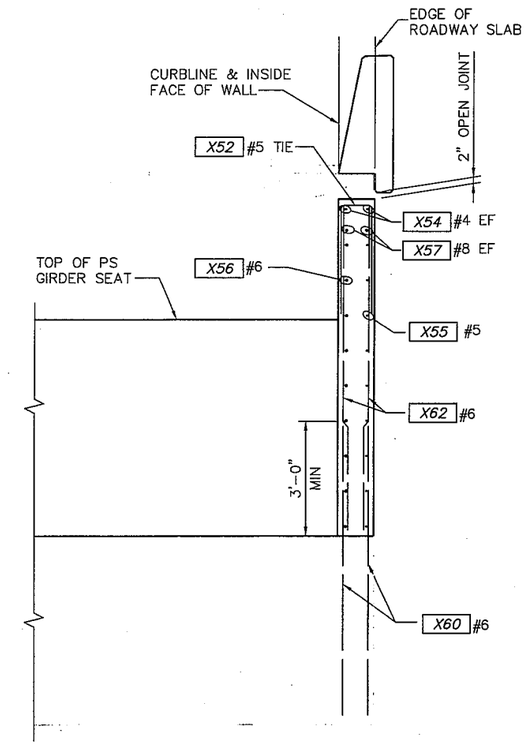

B SECTION

SCALE: 1/2"=1'-0"

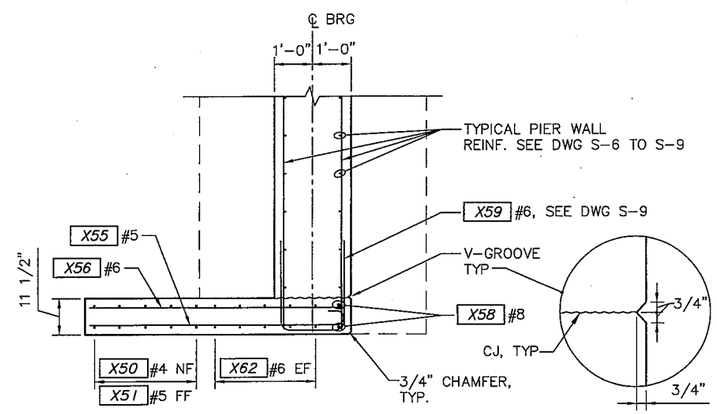

C SECTION

SCALE: 1/2"=1'-0"

NOTES:

1. DUMMY JOINT SPACING, SEE TRAFFIC BARRIER DRAWINGS FOR DETAILS.
2. DIMENSIONS MEASURED ALONG OR NORMAL TO A-LINE UNLESS NOTED OTHERWISE.
3. THE "X" IN THE REINF CALLOUTS IS TO BE REPLACED BY A VALUE OF 1 OR 3 IN ACCORDANCE WITH THE PIER NUMBER.

EA = EACH
EF = EACH FACE
FF = FAR FACE
LT = LEFT
RT = RIGHT

MARK	REVISION DESCRIPTION	BY	APP.	DATE

BergerABAM
33301 9th Avenue South, Suite 300
Federal Way, Washington 98003-2600
(206) 431-2300 Fax: (206) 431-2250

Lewis County Department of Public Works

CHARLES W. SPAY STATE OF WASHINGTON 21872 PROFESSIONAL ENGINEER 12-16-09

LEWIS COUNTY DEPT. OF PUBLIC WORKS
ENGINEER DATE

DRAWN BY LWC
DESIGN BY GAB
CHECK BY CWS
PROJ MGR CWS

LEWIS COUNTY DEPARTMENT OF PUBLIC WORKS

NEWAUKUM BRIDGE NO. 20 REPLACEMENT PROJECT

STUB WALL DETAILS

DRAWING NO. S-10
PROJECT NO. CRP 2072
FED AID NO. BRS-5667(002)
DATE: 12/15/09
SHEET NO. 32 OF 46

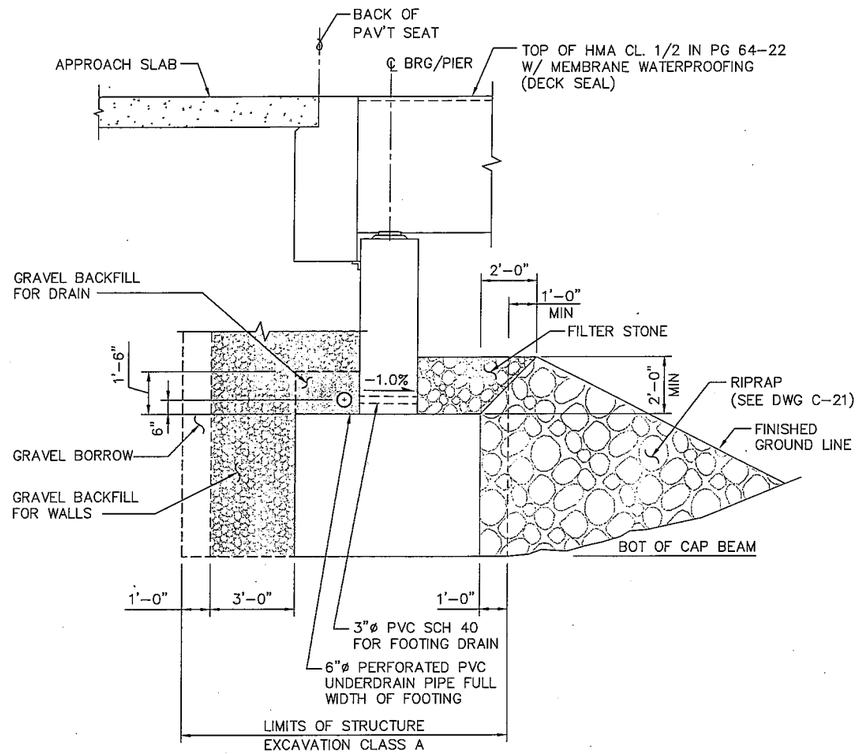

SPECIAL EXCAVATION/BACKFILL, & DRAINAGE DETAIL

SCALE: 3/8"=1'-0" (PIER 1 SHOWN, PIER 3 SIMILAR)

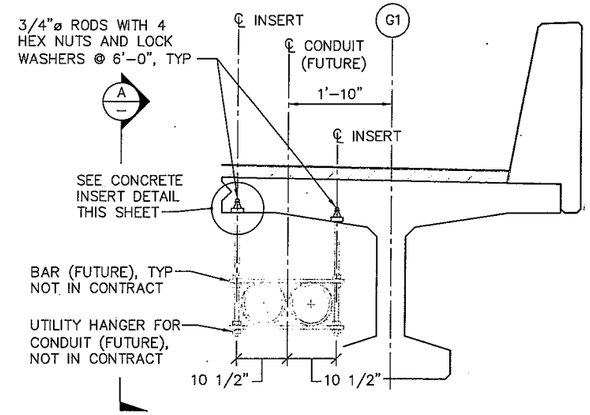

DETAIL – UTILITY INSERTS

SCALE: NONE (LOOKING BACK ON STATION)

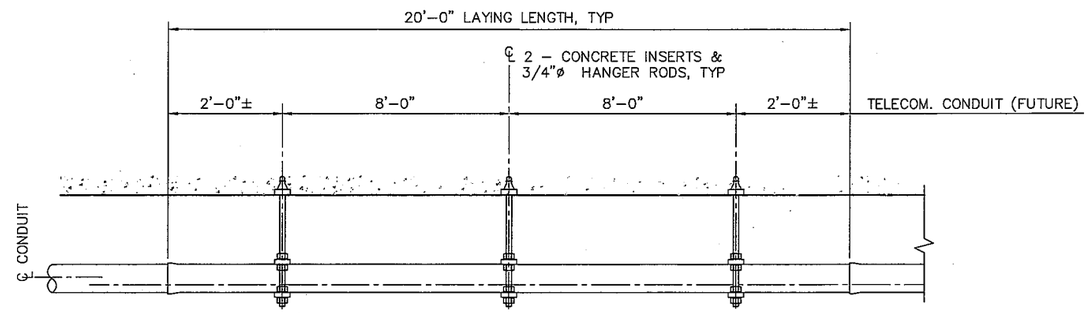

A – SECTION – INSERT LAYOUT

SCALE: NONE

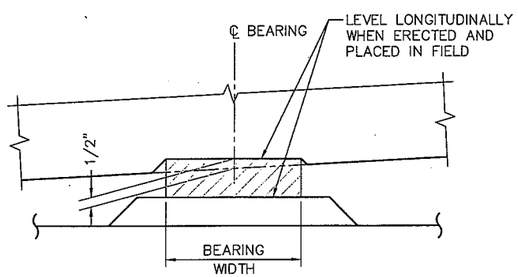

BEARING RECESS IS NORMAL TO ℄ GIRDER

DETAIL – BEARING RECESS

SCALE: NONE

NOTE: SEE DWG S-14 FOR BEARING GROUT PAD DETAILS

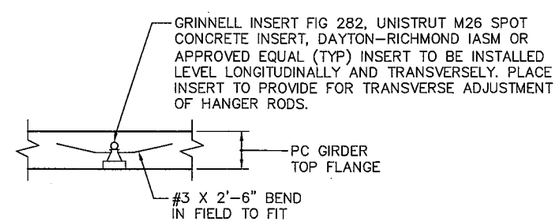

DETAIL – CONCRETE INSERT

SCALE: NONE

NOTES:

1. ALL MATERIALS SHALL BE GALVANIZED AFTER FABRICATION PER AASHTO M 111 OR AASHTO M 232 EXCEPT GRINNELL PIPE ROLL.

MARK	REVISION DESCRIPTION	BY	APP.	DATE

BergerABAM
33301 9th Avenue South, Suite 300
Federal Way, Washington 98003-2600
(206) 431-2300 Fax: (206) 431-2250

Lewis County Department of Public Works

CHARLES W. SIRTA, STATE OF WASHINGTON, 21873, PROFESSIONAL ENGINEER, 12-16-09

LEWIS COUNTY DEPT. OF PUBLIC WORKS

ENGINEER DATE

DRAWN BY LWC
DESIGN BY GAB
CHECK BY CWS
PROJ MGR CWS

LEWIS COUNTY DEPARTMENT OF PUBLIC WORKS
NEWAUKUM BRIDGE NO. 20 REPLACEMENT PROJECT

MISCELLANEOUS DETAILS

DRAWING NO. **S-11**
PROJECT NO. CRP 2072
FED AID NO. BRS-5667(002)
DATE: 12/15/09
SHEET NO. 33 OF 46

TOP OF OAK SHIM ELEVATIONS (FEET)*							
GIRDER	G1	G2	G3	G4	G5	G6	G7
SPAN 1 ELEVATION	263.16	263.28	263.40	263.52	263.40	263.28	263.16
SPAN 2 ELEVATION	263.06	263.18	263.30	263.42	263.30	263.18	263.06

* ELEVATIONS ARE MEASURED ALONG ℄ GIRDER AT THE ℄ OF THE OAK SHIM.

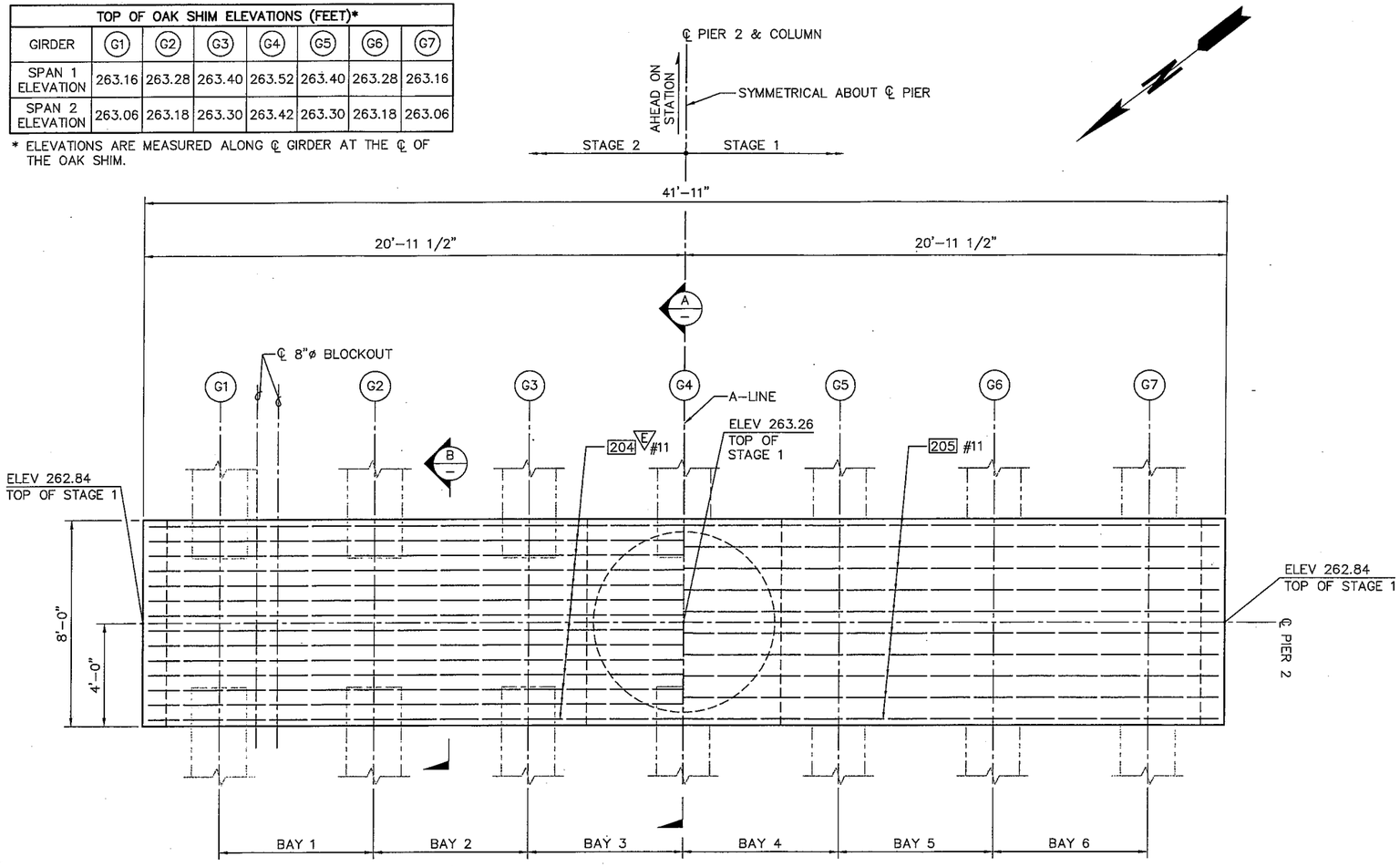

PLAN – PIER 2
SCALE: 3/8"=1'-0"

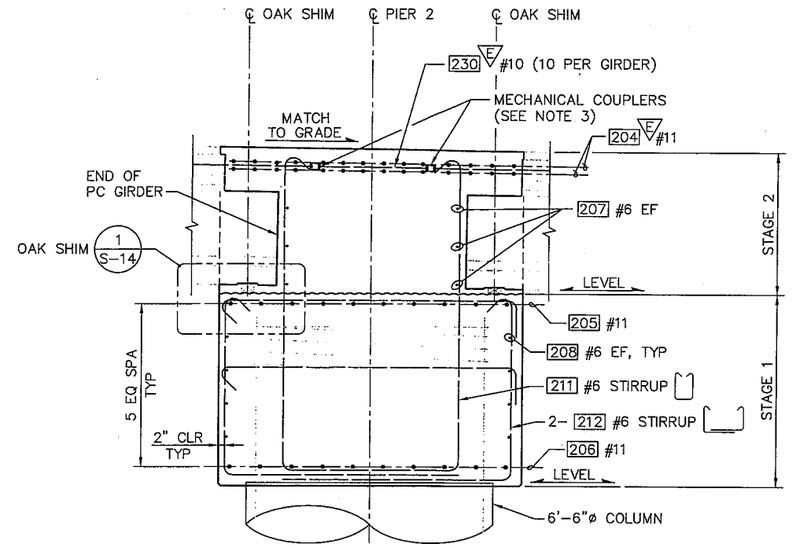

SECTION @ COLUMN
SCALE: 1/2" = 1'-0"

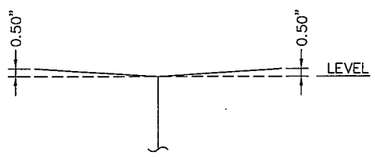

DETAIL
CASING OFFSET

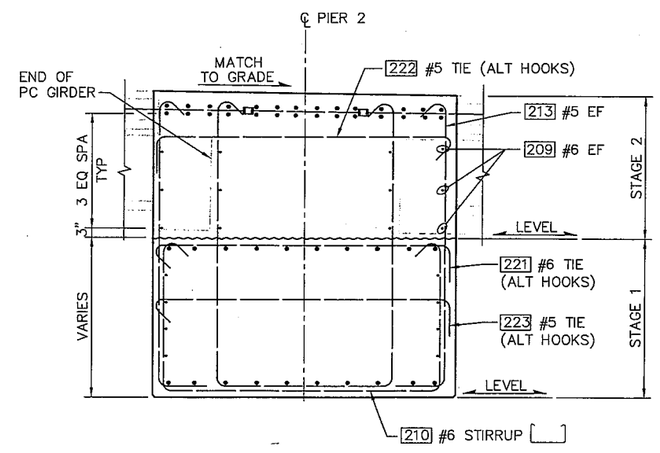

SECTION
SCALE: 1/2" = 1'-0"

NOTES:

1. ALL DIMENSIONS ARE MEASURED EITHER ALONG OR NORMAL TO CENTERLINE OF PIER, UNLESS NOTED OTHERWISE.
2. REINF AND STRANDS EXTENDING FROM GIRDER ENDS NOT SHOWN.
3. MECHANICAL COUPLERS FOR GIRDER END REINF SHALL BE IN ACCORDANCE WITH SECTION 6-02.3 (24)F OF THE STANDARD SPECIFICATIONS.
4. REINF NOT CALLED OUT IN SECTION "B" IS SIMILAR TO THAT SHOWN IN SECTION "A" AND VISE VERSA.
5. FOR REINF SPACINGS NOT CALLED OUT, SPACE REINF AS SHOWN IN THE SECTIONS.
6. IN CANTILEVER, THE 210 #6, 211 #6 & 213 #6 STIRRUP VERTICAL LEG LENGTHS SHALL VARY TO ACCOUNT FOR CROSSBEAM TAPER.

MARK	REVISION DESCRIPTION	BY	APP.	DATE

BergerABAM
33301 9th Avenue South, Suite 300
Federal Way, Washington 98003-2600
(206) 431-2300 Fax: (206) 431-2250

Lewis County Department of Public Works

CHARLES W. SPRY STATE OF WASHINGTON 21872 PROFESSIONAL ENGINEER 12-16-09

LEWIS COUNTY DEPT. OF PUBLIC WORKS
ENGINEER 1/6/10 DATE

DRAWN BY LWC
DESIGN BY GAB
CHECK BY CWS
PROJ MGR CWS

LEWIS COUNTY DEPARTMENT OF PUBLIC WORKS
NEWAUKUM BRIDGE NO. 20 REPLACEMENT PROJECT

PIER 2
PLAN & SECTION

DRAWING NO. **S-12**
PROJECT NO. CRP 2072
FED AID NO. BRS-5667(002)
DATE: 12/15/09
SHEET NO. 34 OF 46

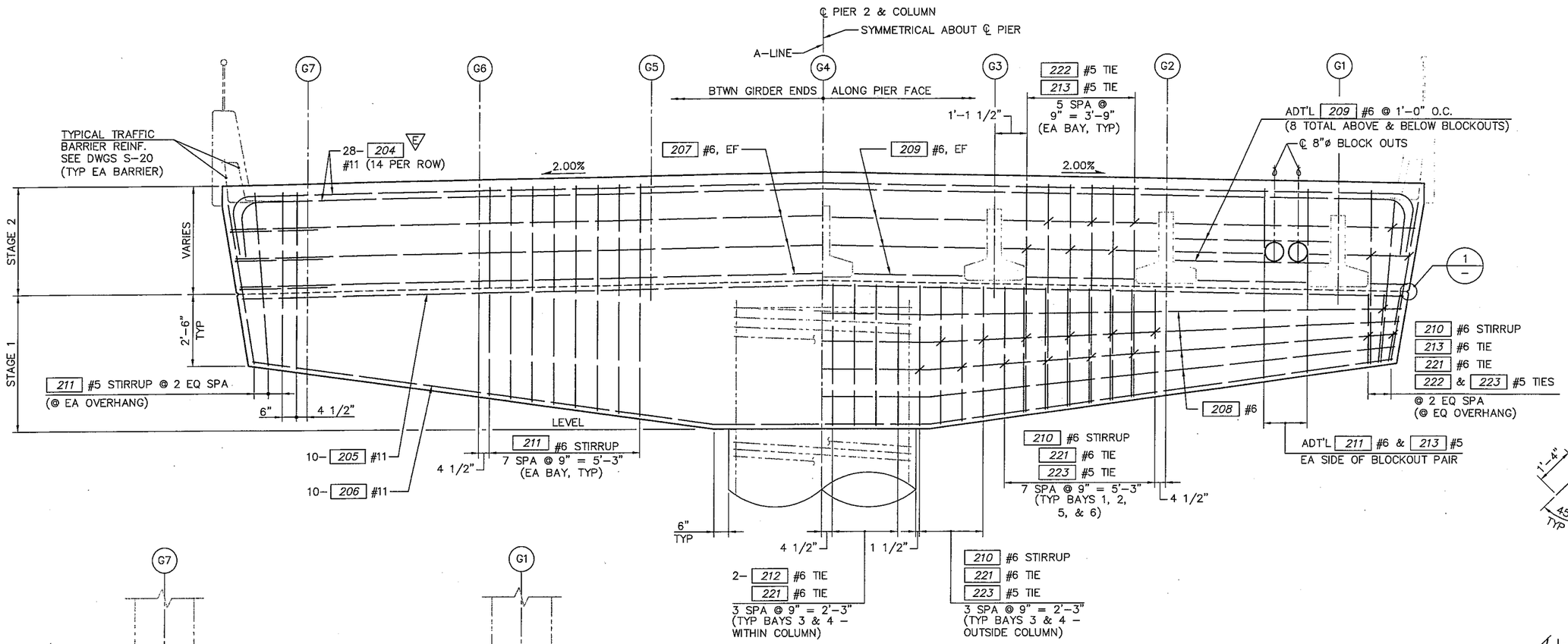

ELEVATION - PIER 2
SCALE: 1/2"=1'-0" (LOOKING BACK ON STATION)

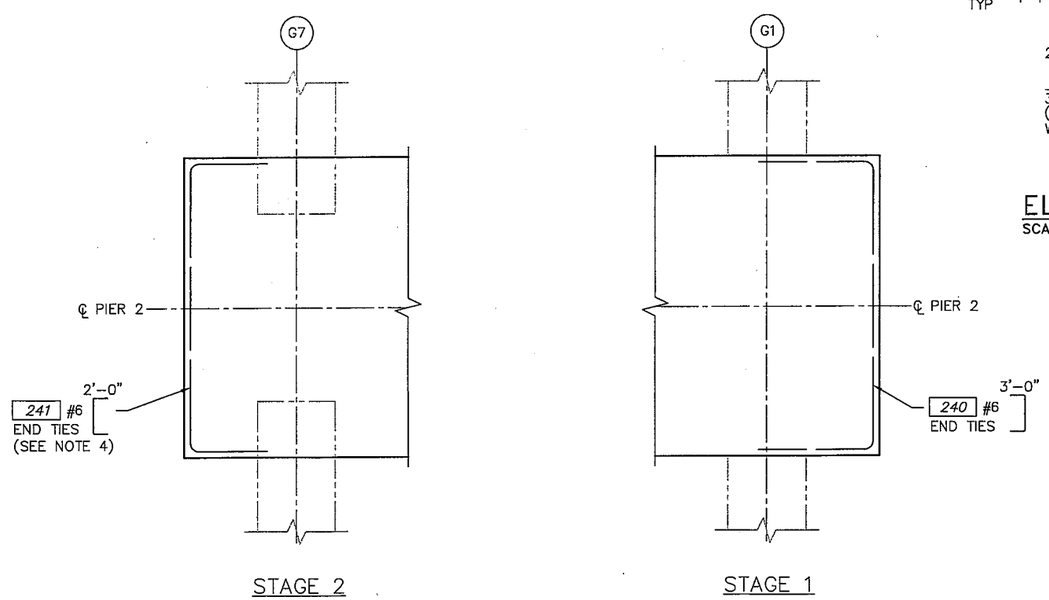

DETAIL - END REINF
SCALE: 1/2"=1'-0"

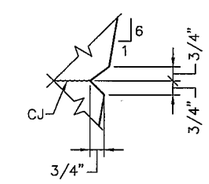

1/- DETAIL - REVEAL
SCALE:

NOTES:

1. FOR ADDITIONAL PIER 2 REINF DETAILS, SEE DWG S-12.
2. REINF AND STRANDS EXTENDING FROM GIRDERS NO SHOWN. SEE DWGS S-16 & S-17.
3. STAGGER 222 #6 & 223 #6 TIES AS SHOWN IN ELEVATION.
4. LEGS OF 241 #6 END TIE MAY BE CUT TO FIT AS NEEDED TO AVOID A CLASH WITH THE EXTERIOR GIRDER LINES.

MARK	REVISION DESCRIPTION	BY	APP.	DATE

BergerABAM
33301 9th Avenue South, Suite 300
Federal Way, Washington 98003-2600
(206) 431-2300 Fax: (206) 431-2250

Lewis County Department of Public Works

CHARLES W. SPRY STATE OF WASHINGTON 21872 STRUCTURAL ENGINEER PROFESSIONAL ENGINEER 12-16-09

LEWIS COUNTY DEPT. OF PUBLIC WORKS
ENGINEER DATE

DRAWN BY LWC
DESIGN BY GAB
CHECK BY CWS
PROJ MGR CWS

LEWIS COUNTY DEPARTMENT OF PUBLIC WORKS
NEWAUKUM BRIDGE NO. 20 REPLACEMENT PROJECT

PIER 2
ELEVATION & DETAILS

DRAWING NO. S-13
PROJECT NO. CRP 2072
FED AID NO. BRS-5667(002)
DATE: 12/15/09
SHEET NO. 35 OF 46

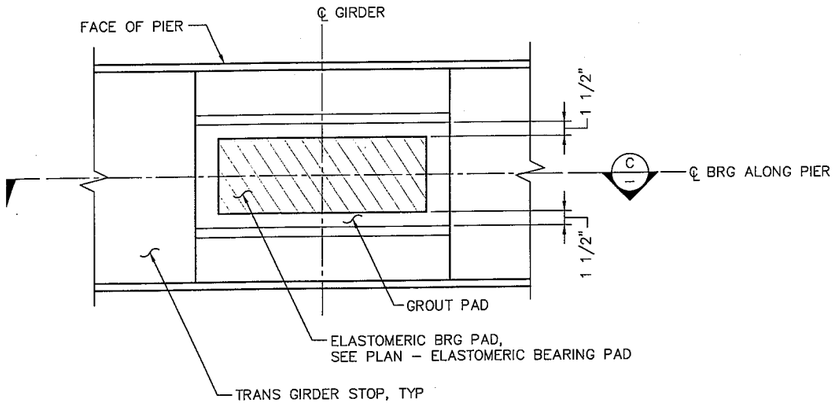

1 / S-6,S-8 DETAIL – GROUT PAD, BEARING & TRANS. GIRDER STOP

SCALE: 1 1/2" = 1'-0"

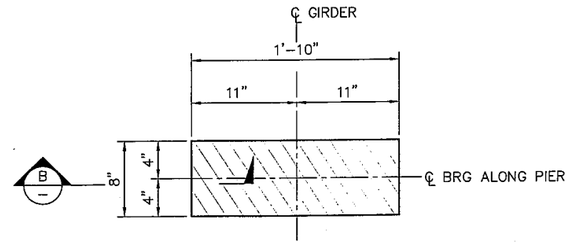

PLAN – ELASTOMERIC BEARING PAD

SCALE: 1 1/2" = 1'-0"

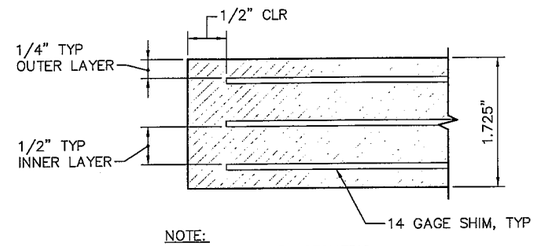

NOTE:
14 LAMINATED ELASTOMERIC BEARING PADS REQUIRED.
(7) AT PIER 1 & (7) AT PIER 3.
DUROMETER HARDNESS = 60
SHIM – ASTM A570, GR 60

B SECTION

SCALE: NONE

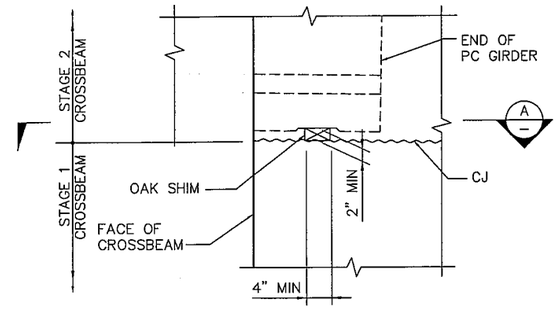

1 / S-12 DETAIL – OAK SHIM

SCALE: 1" = 1'-0"

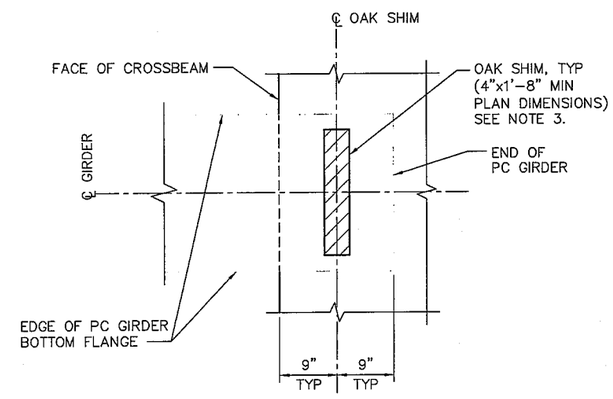

A VIEW – OAK SHIM

SCALE: 1"=1'-0"

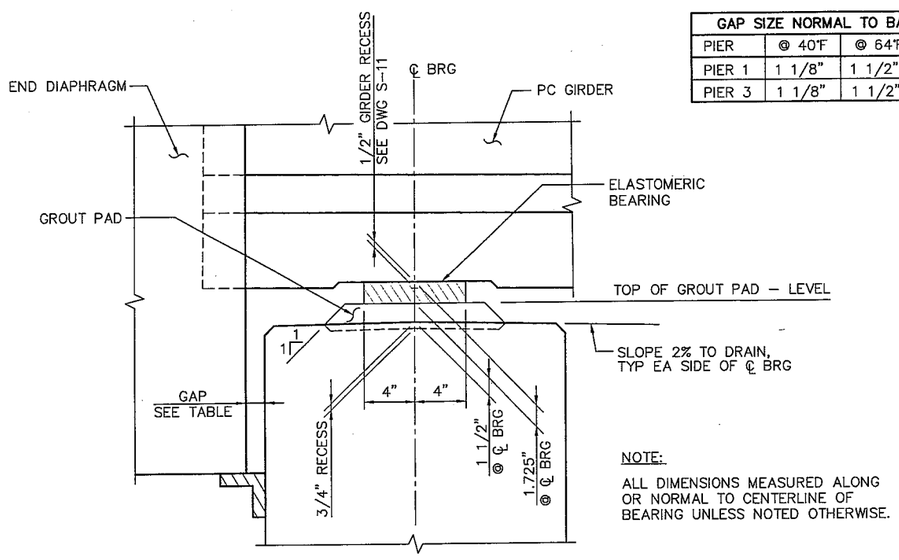

GAP SIZE NORMAL TO BACKWALL			
PIER	@ 40°F	@ 64°F	@ 80°F
PIER 1	1 1/8"	1 1/2"	1 11/16"
PIER 3	1 1/8"	1 1/2"	1 11/16"

NOTE:
ALL DIMENSIONS MEASURED ALONG OR NORMAL TO CENTERLINE OF BEARING UNLESS NOTED OTHERWISE.

ELEVATION – GROUT PAD & BEARING

SCALE: 2"=1'-0" (PIER 1 SHOWN, PIER 3 SIMILAR)

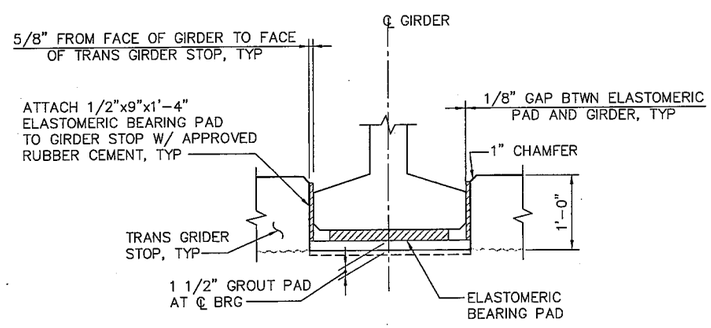

C SECTION – GROUT PAD, BEARING & TRANS. GIRDER STOP

SCALE: 1" = 1'-0"

NOTES:

1. GIRDER STOPS SHALL BE CONSTRUCTED AFTER PLACEMENT OF PRESTRESSED GIRDERS.
2. ELASTOMERIC PADS BETWEEN GIRDER AND GIRDER STOPS SHALL BE COATED WITH RUBBER CEMENT PRIOR TO INSTALLATION.
3. OAK SHIMS ARE SHALL TAPERED SUCH THAT GIRDERS SIT VERTICAL.

MARK	REVISION DESCRIPTION	BY	APP.	DATE

BergerABAM
33301 9th Avenue South, Suite 300
Federal Way, Washington 98003-2600
(206) 431-2300 Fax: (206) 431-2250

Lewis County Department of Public Works

CHARLES W. SPRY, STATE OF WASHINGTON, 21872, STRUCTURAL ENGINEER, PROFESSIONAL ENGINEER — 12-16-09

LEWIS COUNTY DEPT. OF PUBLIC WORKS
ENGINEER DATE

DRAWN BY LWC
DESIGN BY GAB
CHECK BY CWS
PROJ MGR CWS

LEWIS COUNTY DEPARTMENT OF PUBLIC WORKS

NEWAUKUM BRIDGE NO. 20 REPLACEMENT PROJECT

BEARING DETAILS

DRAWING NO. S-14
PROJECT NO. CRP 2072
FED AID NO. BRS-5667(002)
DATE: 12/15/09
SHEET NO. 36 OF 46

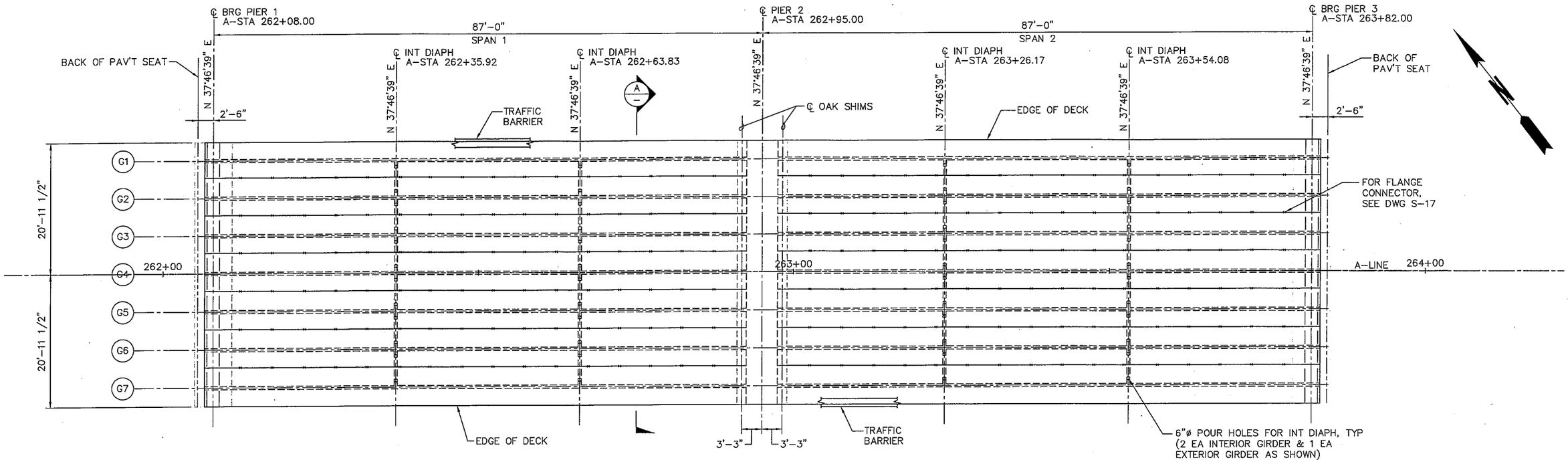

FRAMING PLAN

SCALE: 1/8"=1'-0"

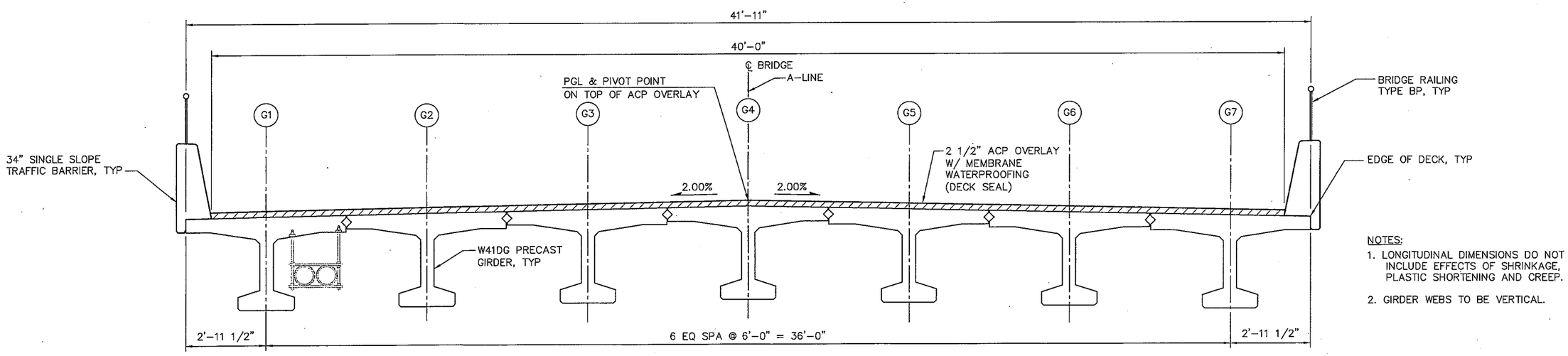

NOTES:

1. LONGITUDINAL DIMENSIONS DO NOT INCLUDE EFFECTS OF SHRINKAGE, PLASTIC SHORTENING AND CREEP.
2. GIRDER WEBS TO BE VERTICAL.

SECTION A

SCALE: 1/2" = 1'-0"

MARK	REVISION DESCRIPTION	BY	APP.	DATE

BergerABAM
33301 9th Avenue South, Suite 300
Federal Way, Washington 98003-2600
(206) 431-2300 Fax: (206) 431-2250

Lewis County Department of Public Works

CHARLES W. SPRY, STATE OF WASHINGTON, 21872, STRUCTURAL ENGINEER, PROFESSIONAL ENGINEER — 12-12-09

LEWIS COUNTY DEPT. OF PUBLIC WORKS

ENGINEER DATE

DRAWN BY LWC
DESIGN BY GAB
CHECK BY CWS
PROJ MGR CWS

LEWIS COUNTY DEPARTMENT OF PUBLIC WORKS

NEWAUKUM BRIDGE NO. 20 REPLACEMENT PROJECT

FRAMING PLAN & CROSS SECTION

DRAWING NO. **S-15**
PROJECT NO. CRP 2072
FED AID NO. BRS-5667(002)
DATE: 12/15/09
SHEET NO. 37 OF 46

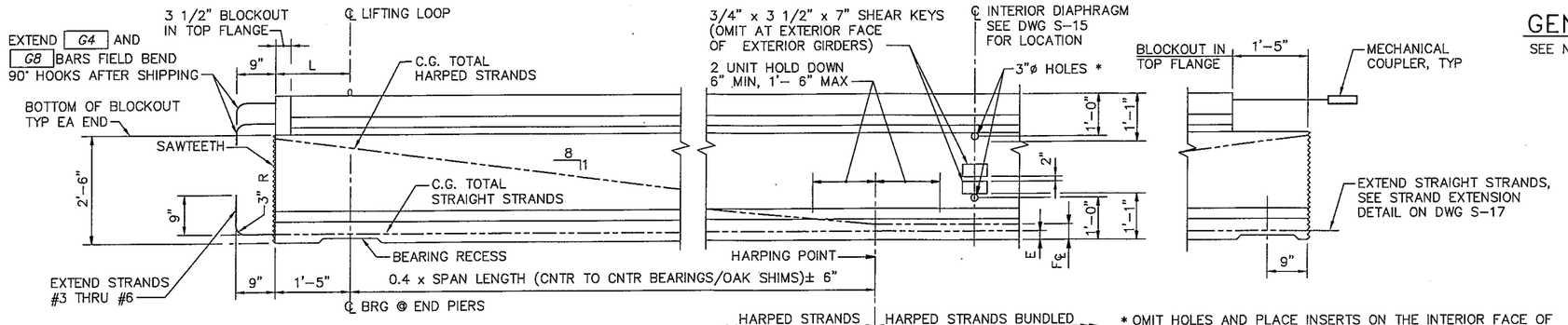

ELEVATION – GIRDER

SCALE: NONE

GENERAL NOTES

SEE NOTES ON DWG S-17.

* OMIT HOLES AND PLACE INSERTS ON THE INTERIOR FACE OF EXTERIOR GIRDERS. PLACE HOLES AND INSERTS PARALLEL TO SKEW. INSERTS SHALL BE 1" BURKE HI-TENSILE, LANCASTER MALLEABLE, DAYTON-SUPERIOR F-62 FLARED THIN SLAB (1" x 4 5/8") FERRULE INSERT OR APPROVED EQUAL, TYP.

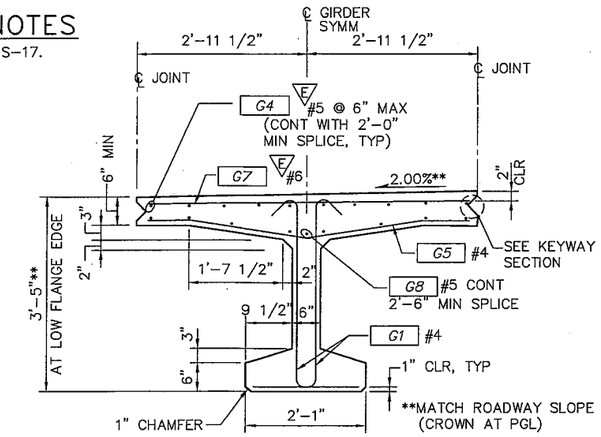

INTERIOR NEAR MIDSPAN

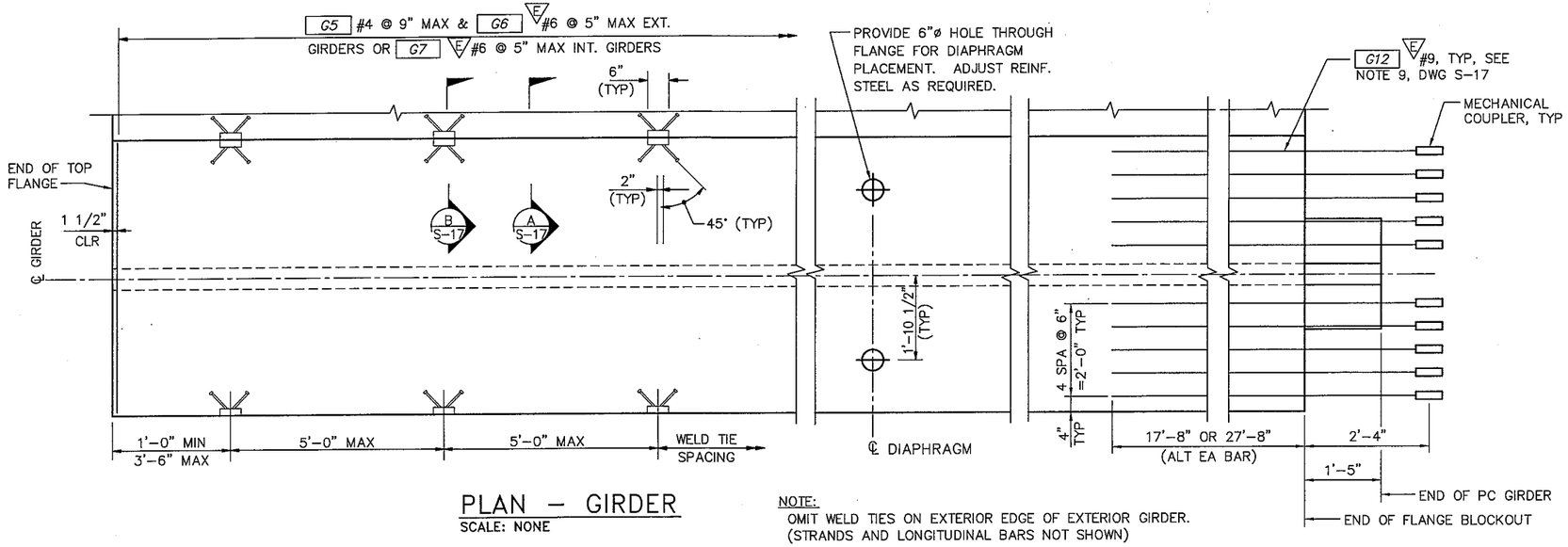

PLAN – GIRDER

SCALE: NONE

NOTE:
OMIT WELD TIES ON EXTERIOR EDGE OF EXTERIOR GIRDER.
(STRANDS AND LONGITUDINAL BARS NOT SHOWN)

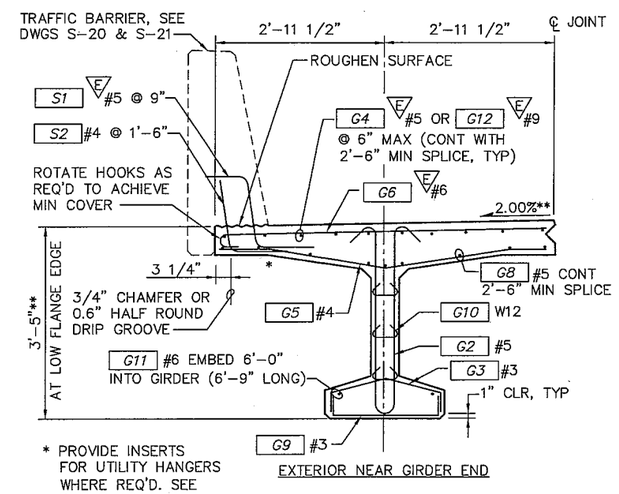

EXTERIOR NEAR GIRDER END

GIRDER REINFORCING

SCALE: 3/4"=1'-0"

FOR DETAILS NOT SHOWN, SEE INTERIOR GIRDER

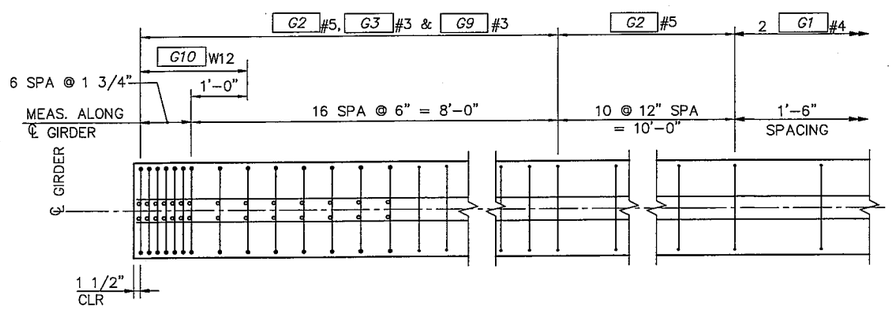

PLAN – SECTION THROUGH GIRDER WEB

SCALE: NONE

MARK	LOCATION	SIZE	
G1	GIRDER STIRRUPS	4	
G2	GIRDER END STIRRUPS	5	
G3	BOTTOM FLANGE – TOP	3	
G4	TOP OF TOP FLANGE – LONGIT.	E 5	STR.
G5	BOT. OF TOP FLANGE – TRANSV.	4	
G6	TOP TRANSV. – EXT. GIRDER	E 6	
G7	TOP TRANSV. – INT. GIRDER	E 6	STR.
G8	BOT. OF TOP FLANGE – LONGIT.	5	STR.
G9	BOTTOM FLANGE – BOTTOM	3	
G10	GIRDER END TIES	W12	ΔΔ
G11	GIRDER LONGIT.	6	STR.
G12	TOP OF TOP FLANGE – LONGIT	E 9	STR.
S1	T.B. TO DECK TIE	E 5	
S2	T.B. TO DECK TIE	4	

BENDING DIAGRAM (ALL DIMENSIONS ARE OUT TO OUT)

E DENOTES EPOXY COATED

ΔΔ #3 OR #4 BARS MAY BE USED IN LIEU OF W12. FIELD BEND IS OPTIONAL.

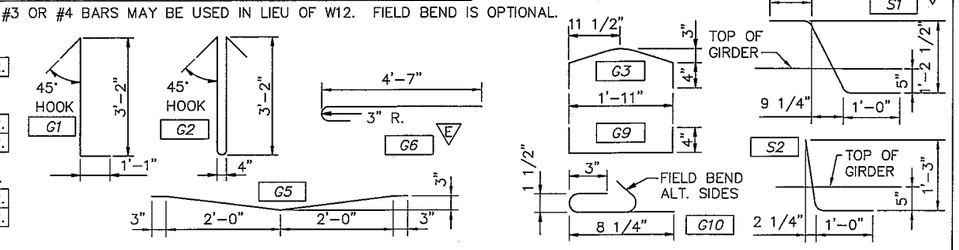

MARK	REVISION DESCRIPTION	BY	APP.	DATE

BergerABAM
33301 9th Avenue South, Suite 300
Federal Way, Washington 98003-2600
(206) 431-2300 Fax: (206) 431-2250

Lewis County Department of Public Works

CHARLES W. SPRY STATE OF WASHINGTON 21872 STRUCTURAL ENGINEER PROFESSIONAL ENGINEER 12-16-09

LEWIS COUNTY DEPT. OF PUBLIC WORKS
ENGINEER DATE

DRAWN BY LWC
DESIGN BY GAB
CHECK BY CWS
PROJ MGR CWS

LEWIS COUNTY DEPARTMENT OF PUBLIC WORKS
NEWAUKUM BRIDGE NO. 20 REPLACEMENT PROJECT

W41DG GIRDER DETAILS
SHEET 1

DRAWING NO. S-16
PROJECT NO. CRP 2072
FED AID NO. BRS-5667(002)
DATE: 12/15/09
SHEET NO. 38 OF 46

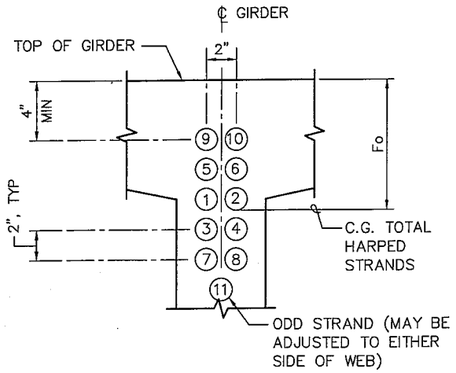

STRAND PATTERN AT GIRDER END

SCALE: NONE

HARPED STRAND LOCATION SEQUENCE SHALL BE AS SHOWN (1), (2) ETC.

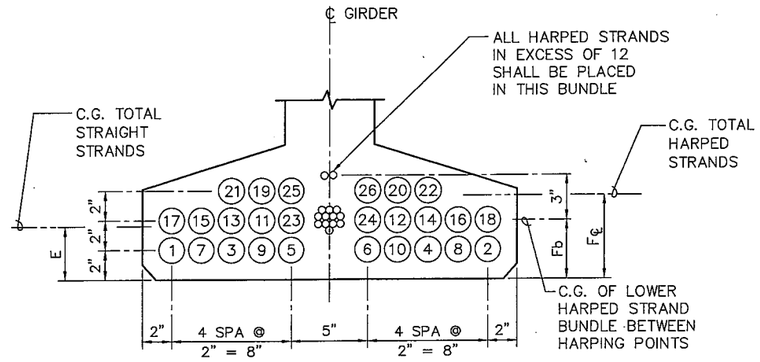

STRAND PATTERN AT ℄ SPAN

SCALE: NONE

STRAND LOCATION SEQUENCE SHALL BE AS SHOWN (1), (2) ETC.

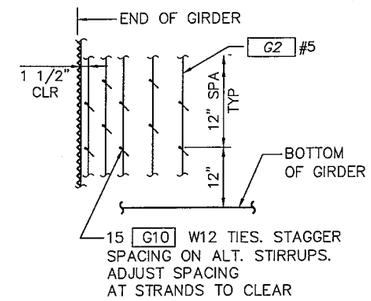

TIE SPACING DETAIL

SCALE: NONE

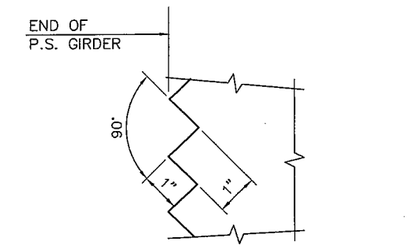

NOTE: SAWTEETH ARE FULL WIDTH – USE SAWTEETH KEYS FROM BOTTOM OF BOTTOM FLANGE TO BOTTOM OF LOWEST HARPED STRAND

SAWTEETH DETAILS

SCALENONE

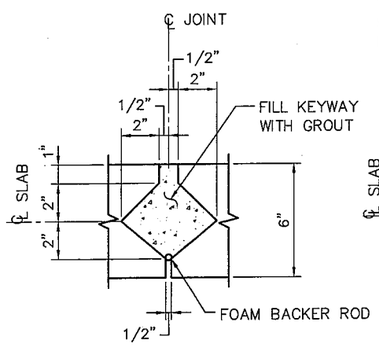

(A) S-16 SECTION – KEYWAY

SCALE: NONE

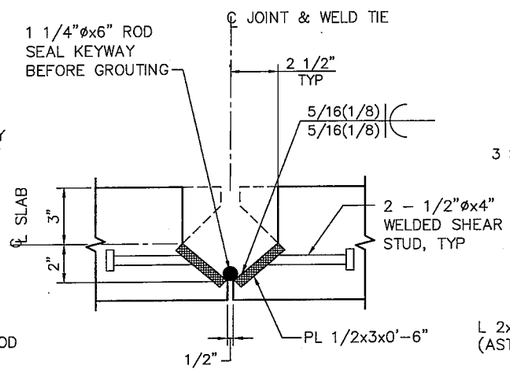

WELD TIE ALTERNATE #1

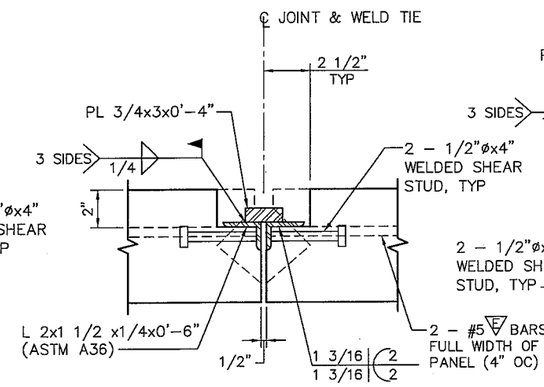

WELD TIE ALTERNATE #2

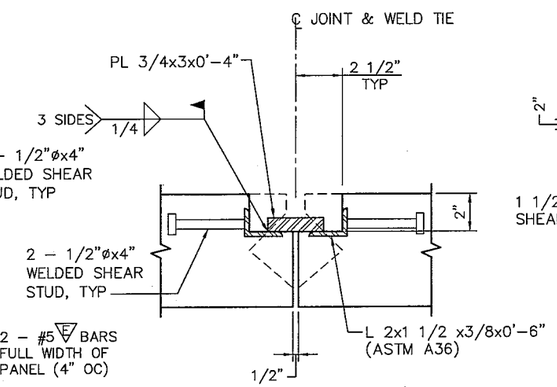

WELD TIE ALTERNATE #3

(B) S-16 SECTION – WELD TIE ALTERNATES

SCALE: NONE

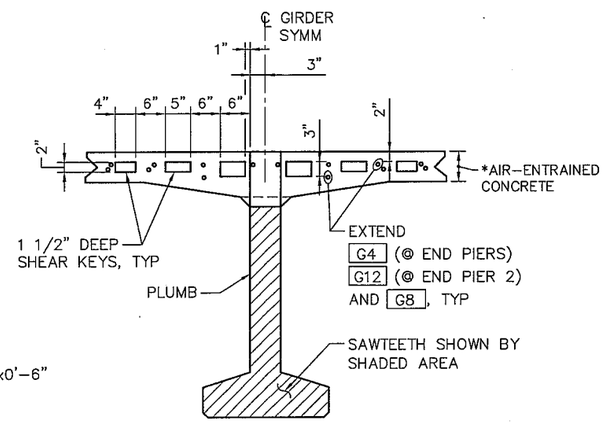

*ALTERNATIVELY THE TOP 2 INCHES OF THE GIRDER FLANGE MAY BE AIR–ENTRAINED CONCRETE

SECTION – GIRDER END

SCALE: NONE

AT BOTH ENDS

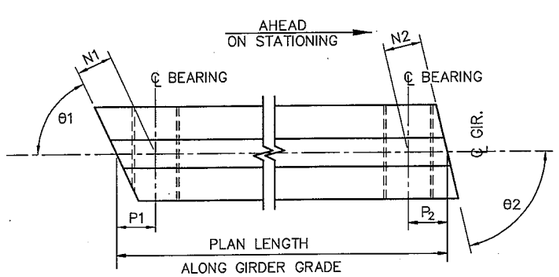

END 1 END 2

GENERAL NOTES

1. FORMS FOR THE BEARING PAD RECESSES SHALL BE CONSTRUCTED AND FASTENED IN SUCH A MANNER SO AS TO NOT CAUSE DAMAGE TO THE GIRDERS DURING THE STRAND RELEASE OPERATION.
2. TOP 2 INCHES OF GIRDER FLANGE SHALL BE AIR–ENTRAINED CONCRETE.
3. SPAN LENGTH SHALL BE INCREASED AS NECESSARY TO COMPENSATE FOR SHORTENING DUE TO PRESTRESS AND SHRINKAGE.
4. ALL PRESTRESSING STRANDS SHALL BE 0.6 INCH ø LOW RELAXATION SEVEN WIRE STAND, AASHTO M203 GR. 270. ALL MILD STEEL REINFORCING SHALL BE AASHTO M31 GR. 60. ALL STUDS SHALL CONFORM TO STD. SPEC. SECTION 9–06.15. ALL OTHER STEEL SHALL BE AASHTO M183 AND SHALL BE PAINTED WITH 2 COATS OF STATE FORMULA A–9–73.
5. AFTER ERECTION, CUT OFF LIFTING LOOPS 1 INCH BELOW THE TOP OF THE FLANGE AND FILL WITH AN APPROVED GROUT PRIOR TO PLACING OF THE OVERLAY. LIFTING LOOP LOCATION TO BE DETERMINED BY MANUFACTURER. THE SIZE AND AMOUNT OF ALL LIFTING STRANDS IS TO BE DETERMINED BY THE MANUFACTURER.
6. DEFLECT GIRDER FORMS AS REQUIRED TO PROVIDE FINAL PROFILE GRADE (SEE DWG S–1). FINAL DEFLECTED SHAPE SHALL BE PARABOLIC TO, AND SHALL APPROXIMATE, THE ROADWAY PROFILE. THE FORM DEFLECTION SHALL ACCOUNT FOR THE ESTIMATED CAMBERS GIVEN IN THE GIRDER SCHEDULE, INCLUDING THE CAMBER NEEDED TO MATCH THE ROADWAY PROFILE GRADE. THE CONTRACTOR SHALL INDEPENDENTLY VERIFY GIRDER CAMBERS AS SHOWN IN THE GIRDER SCHEDULE ON DWG S–18.
7. FOR UTILITY HANGER INSERT LOCATIONS, SEE DWG S–11.
8. SEE GIRDER SHCEDULE ON DWG S–18.
9. G12 E #9 BARS ARE TO BE PLACED ONLY AT END TYPE D OF EACH GIRDER. THE BARS ARE TO LAP (2'–6" MIN LAP) WITH G4 E #5 BARS.

MARK	REVISION DESCRIPTION	BY	APP.	DATE

BergerABAM
33301 9th Avenue South, Suite 300
Federal Way, Washington 98003-2600
(206) 431-2300 Fax: (206) 431-2250

Lewis County Department of Public Works

CHARLES W. SPRY STATE OF WASHINGTON 21872 STRUCTURAL ENGINEER PROFESSIONAL ENGINEER 12-16-09

LEWIS COUNTY DEPT. OF PUBLIC WORKS

ENGINEER DATE

DRAWN BY LWC
DESIGN BY GAB
CHECK BY CWS
PROJ MGR CWS

LEWIS COUNTY DEPARTMENT OF PUBLIC WORKS

NEWAUKUM BRIDGE NO. 20 REPLACEMENT PROJECT

W41DG GIRDER DETAILS
SHEET 2

DRAWING NO. S-17
PROJECT NO. CRP 2072
FED AID NO. BRS-5667(002)
DATE: 12/15/09
SHEET NO. 39 OF 46

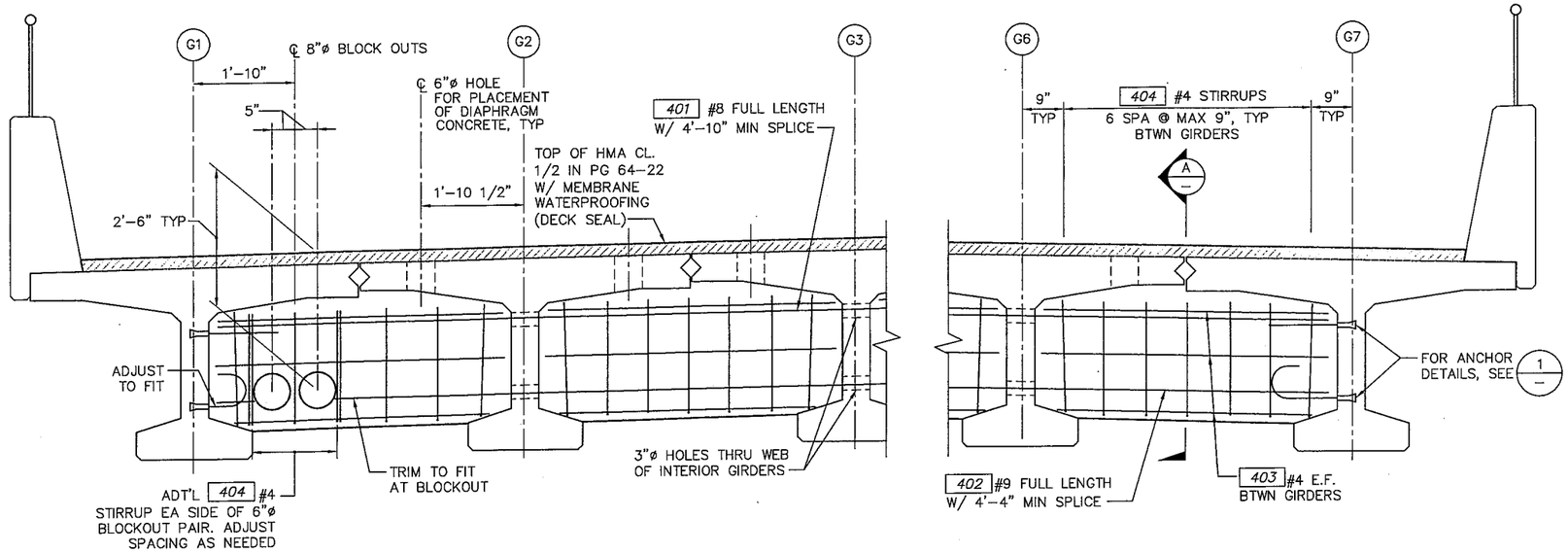

ELEVATION – TYPICAL INTERMEDIATE DIAPHRAGM

SCALE: 3/4" = 1'-0" (LOOKING AHEAD ON STATION)

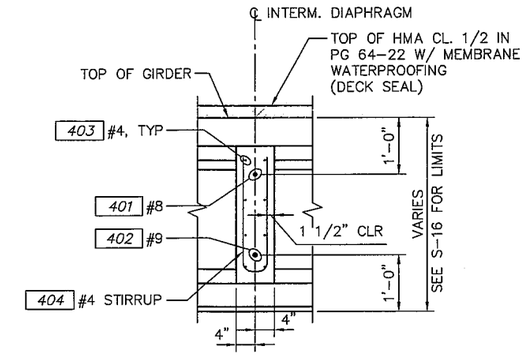

A – SECTION – INTERM. DIAPHRAGM

SCALE: 3/4"=1'-0"

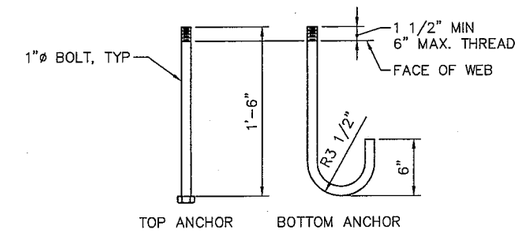

1 – DETAIL – ANCHOR

SCALE: 1 1/2"=1'-0" (ASTM A307)

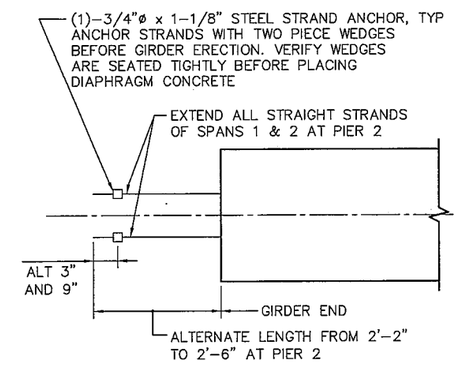

DETAIL – STRAND EXTENSION

GIRDER SCHEDULE

SPAN	GIRDER	END 1 TYPE	END 2 TYPE	L (FEET)	θ1	θ2	N1 (INCHES)	N2 (INCHES)	PLAN LENGTH (MEAS. ALONG GIRDER GRADE)	F'C (KSI)	F'CI (KSI)	HARPED NO. OF STRANDS	HARPED JACKING FORCE (KIPS)	STRAIGHT NO. OF STRANDS	STRAIGHT JACKING FORCE (KIPS)	LOCATION OF C.G. STRANDS (INCHES) E	FC℄	Fb	Fo	C* (INCHES)	D40 (INCHES)	D120 (INCHES)
1	G1	A	D	1'-9"	90	90	1'-5"	9"	85'-11"	6.4	5.5	11	483	14	615	2.57	3.00	3.00	8.55	0.24	3.02	3.55
1	G2	A	D	1'-9"	90	90	1'-5"	9"	85'-11"	6.4	5.5	11	483	14	615	2.57	3.00	3.00	8.55	0.27	2.99	3.52
1	G3	A	D	1'-9"	90	90	1'-5"	9"	85'-11"	6.4	5.5	11	483	14	615	2.57	3.00	3.00	8.55	0.27	2.99	3.52
1	G4	A	D	1'-9"	90	90	1'-5"	9"	85'-11"	6.4	5.5	11	483	14	615	2.57	3.00	3.00	8.55	0.05	2.99	3.52
1	G5	A	D	1'-9"	90	90	1'-5"	9"	85'-11"	6.4	5.5	11	483	14	615	2.57	3.00	3.00	8.55	0.27	2.99	3.52
1	G6	A	D	1'-9"	90	90	1'-5"	9"	85'-11"	6.4	5.5	11	483	14	615	2.57	3.00	3.00	8.55	0.27	2.99	3.52
1	G7	A	D	1'-9"	90	90	1'-5"	9"	85'-11"	6.4	5.5	11	483	14	615	2.57	3.00	3.00	8.55	0.24	3.02	3.55
2	G1	D	A	1'-9"	90	90	9"	1'-5"	85'-11"	6.4	5.5	11	483	14	615	2.57	3.00	3.00	8.55	0.24	3.02	3.55
2	G2	D	A	1'-9"	90	90	9"	1'-5"	85'-11"	6.4	5.5	11	483	14	615	2.57	3.00	3.00	8.55	0.27	2.99	3.52
2	G3	D	A	1'-9"	90	90	9"	1'-5"	85'-11"	6.4	5.5	11	483	14	615	2.57	3.00	3.00	8.55	0.27	2.99	3.52
2	G4	D	A	1'-9"	90	90	9"	1'-5"	85'-11"	6.4	5.5	11	483	14	615	2.57	3.00	3.00	8.55	0.05	2.99	3.52
2	G5	D	A	1'-9"	90	90	9"	1'-5"	85'-11"	6.4	5.5	11	483	14	615	2.57	3.00	3.00	8.55	0.27	2.99	3.52
2	G6	D	A	1'-9"	90	90	9"	1'-5"	85'-11"	6.4	5.5	11	483	14	615	2.57	3.00	3.00	8.55	0.27	2.99	3.52
2	G7	D	A	1'-9"	90	90	9"	1'-5"	85'-11"	6.4	5.5	11	483	14	615	2.57	3.00	3.00	8.55	0.24	3.02	3.55

NOTES:

1. GIRDER PROFILE TO MATCH ROADWAY PROFILE GRADE. GIRDER LENGTH MEASURED ALONG BOTTOM FLANGE.
2. D40 AND D120 REPRESENT THE GIRDER CAMBER AT 40 AND 120 DAYS AFTER STRAND RELEASE RESPECTIVELY. "C" REPRESENTS THE ESTIMATED FINAL CAMBER AFTER APPLICATION OF ALL DEAD LOADS (ASSUMED AT 120 DAYS).
3. FINAL LOCATION OF LIFTING LOOPS TO BE DETERMINED BY THE CONTRACTOR.

MARK	REVISION DESCRIPTION	BY	APP.	DATE

BergerABAM
33301 9th Avenue South, Suite 300
Federal Way, Washington 98003-2600
(206) 431-2300 Fax: (206) 431-2250

Lewis County Department of Public Works

CHARLES W. SPRY, STATE OF WASHINGTON, 21872, STRUCTURAL ENGINEER, PROFESSIONAL ENGINEER

LEWIS COUNTY DEPT. OF PUBLIC WORKS

ENGINEER DATE

DRAWN BY LWC
DESIGN BY GAB
CHECK BY CWS
PROJ MGR CWS

LEWIS COUNTY DEPARTMENT OF PUBLIC WORKS
NEWAUKUM BRIDGE NO. 20 REPLACEMENT PROJECT

INTERMEDIATE DIAPHRAGM DETAILS

DRAWING NO. **S-18**
PROJECT NO. CRP 2072
FED AID NO. BRS-5667(002)
DATE: 12/15/09
SHEET NO. 40 OF 46

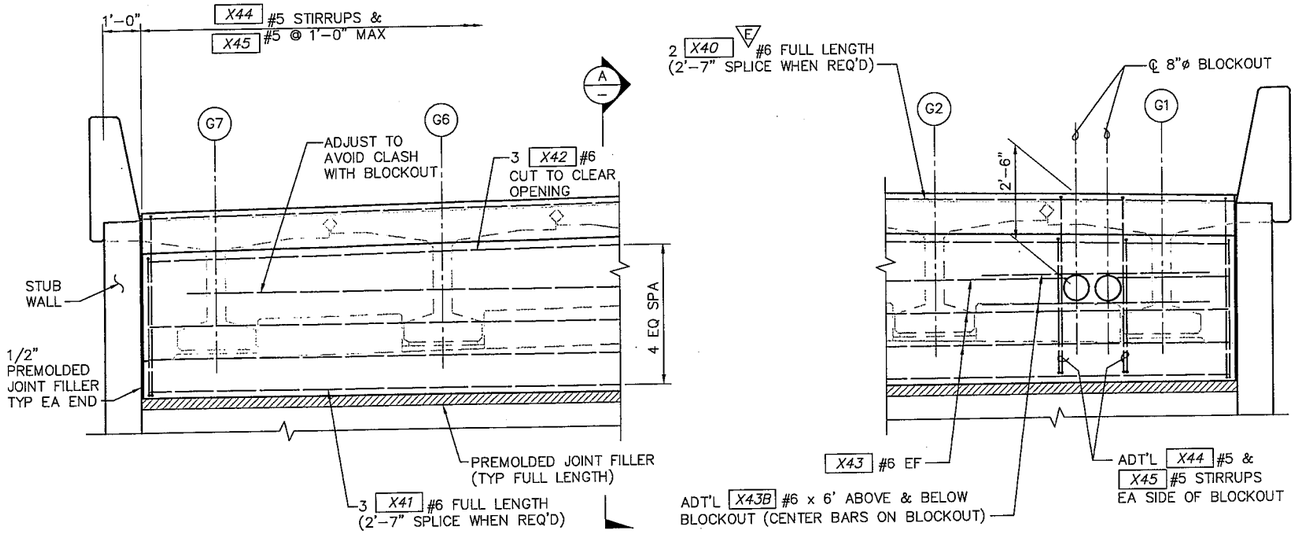

ELEVATION – TYPICAL END DIAPHRAGM AT END PIERS

SCALE: 1/2"=1'-0" (PIER 3 SHOWN LOOKING BACK ON STATION, PIER 1 SIMILAR)

NOTE:
THE "X" IN THE REINF CALLOUTS SHALL BE REPLACED WITH A VALUE OF 1 OR 3 IN ACCORDANCE WITH THE PIER NUMBER.

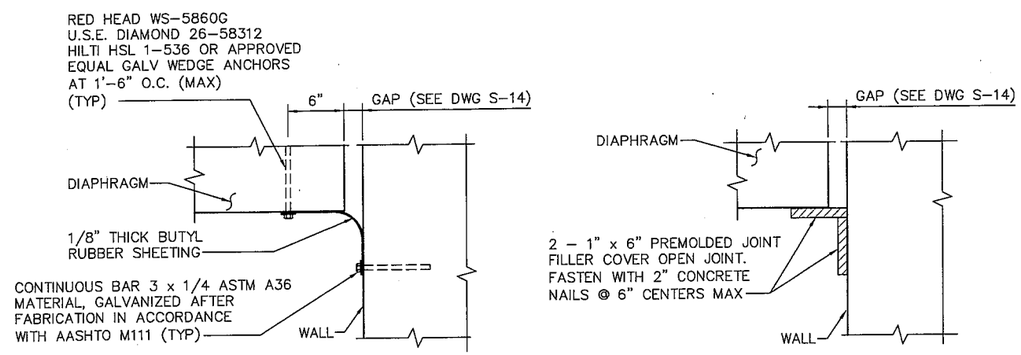

DETAIL – JOINT FILLER

SCALE: 1 1/2"=1'-0"

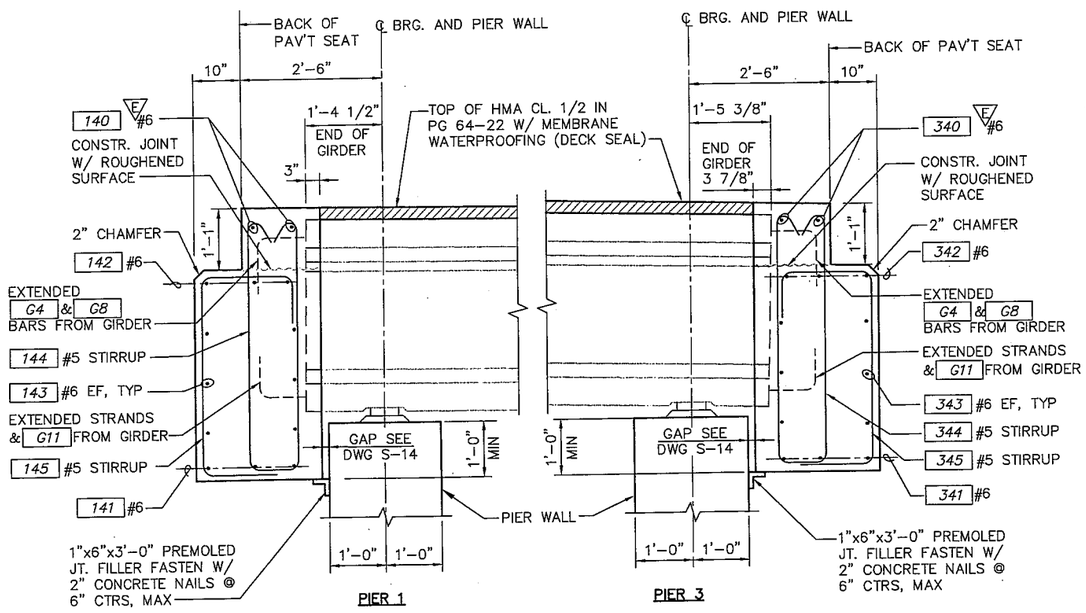

(A) SECTION – END DIAPHRAGM

SCALE: 3/4"=1'-0"

NOTE:
1. TRANSVERSE GIRDER STOPS NOT SHOWN FOR CLARITY.
2. ALL LONGIT DIMENSIONS SHOWN ARE MEASURED NORMAL TO ℄ BRG.

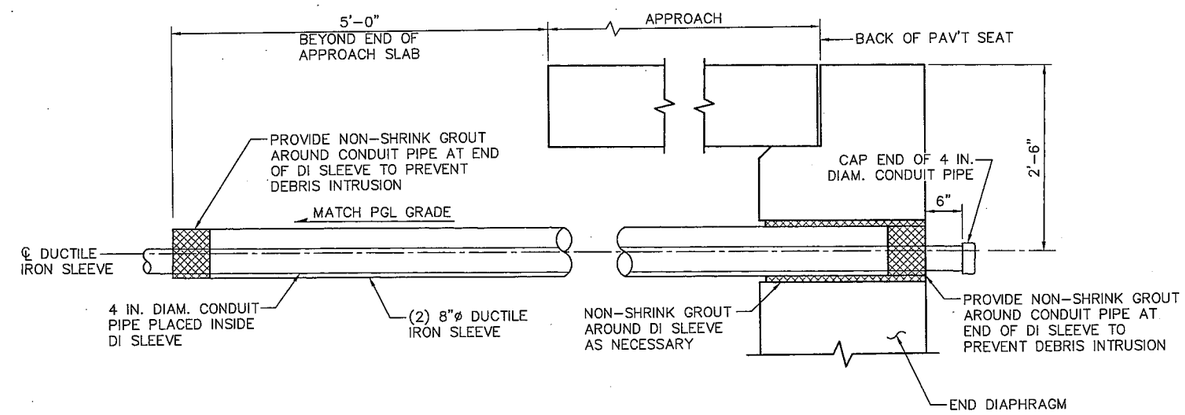

DETAIL – SLEEVE FOR TELECOMMUNICATION CONDUITS

SCALE: 1"=1'-0" (SLEEVE ONLY)

NOTE: FURNISHING AND INSTALLING DI SLEEVES, CAP, NON-SHRINK GROUT, ETC. SHALL BE INCIDENTAL TO SUPER STRUCTURE.

MARK	REVISION DESCRIPTION	BY	APP.	DATE

BergerABAM
33301 9th Avenue South, Suite 300
Federal Way, Washington 98003-2600
(206) 431-2300 Fax: (206) 431-2250

Lewis County Department of Public Works

CHARLES W. SIRY, STATE OF WASHINGTON, 21872, STRUCTURAL ENGINEER, PROFESSIONAL ENGINEER, 12-16-09

LEWIS COUNTY DEPT. OF PUBLIC WORKS
ENGINEER DATE

DRAWN BY LWC
DESIGN BY GAB
CHECK BY CWS
PROJ MGR CWS

LEWIS COUNTY DEPARTMENT OF PUBLIC WORKS
NEWAUKUM BRIDGE NO. 20 REPLACEMENT PROJECT

END DIAPHRAGM DETAILS

DRAWING NO. **S-19**
PROJECT NO. CRP 2072
FED AID NO. BRS-5667(002)
DATE: 12/15/09
SHEET NO. 41 OF 46

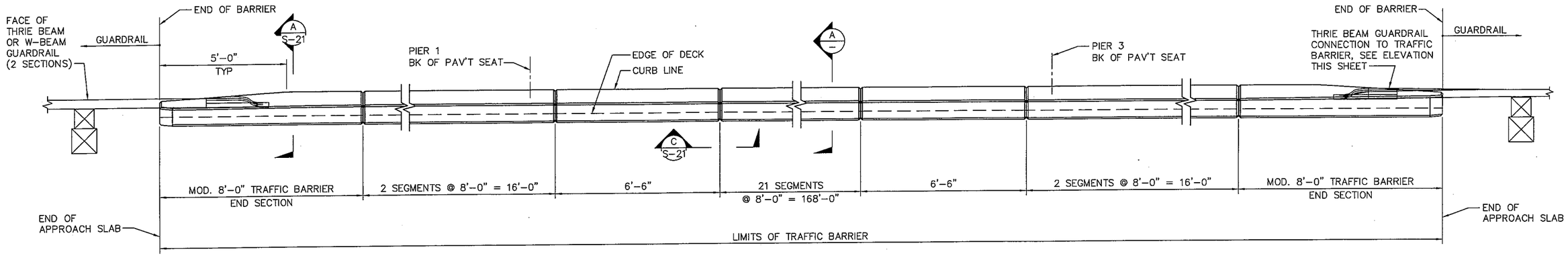

PLAN – TRAFFIC BARRIER

SCALE: 1/2"=1'-0"

BARRIER IS CONTINUOUS. CONSTRUCTION JOINTS WITH SHEAR KEYS ARE PERMISSIBLE AT DUMMY JOINT LOCATIONS. FORM JOINTS BETWEEN DUMMY JOINTS SHALL NOT BE PERMITTED.

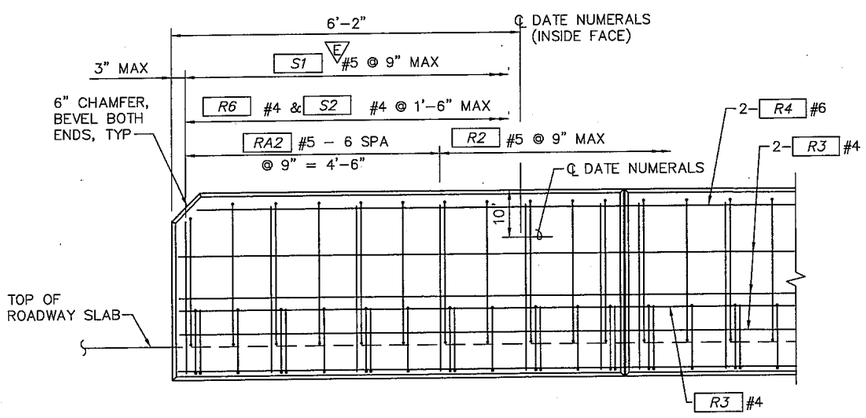

NOTE:

FOR APPROACH SLAB REINFORCEMENT SEE WSDOT STD PLAN A–2

ELEVATION – OUTSIDE END OF MODIFIED TRAFFIC BARRIER

SCALE: 3/4"=1'-0"

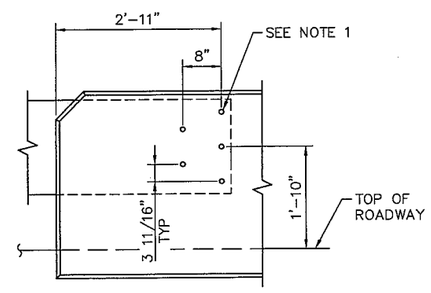

THRIE BEAM END SECTION DESIGN "F" (SEE WSDOT STD PLAN C–7a)

NOTE:

1. PROVIDE (5) 7/8"ø ROCKET/KOHLER F–50, LANCASTER MALLEABLE, DAYTON/RICHMOND F–62 FLARED THIN SLAB FERRULE INSERTS, OR APPROVED EQUAL. (RESIN–BONDED ANCHORS MAY BE SUBSTITUED)

ELEVATION – OUTSIDE TRAFFIC BARRIER GUARDRAIL CONNECTION

SCALE: 3/4"=1'-0"

(WHERE SHOWN ON LAYOUT)

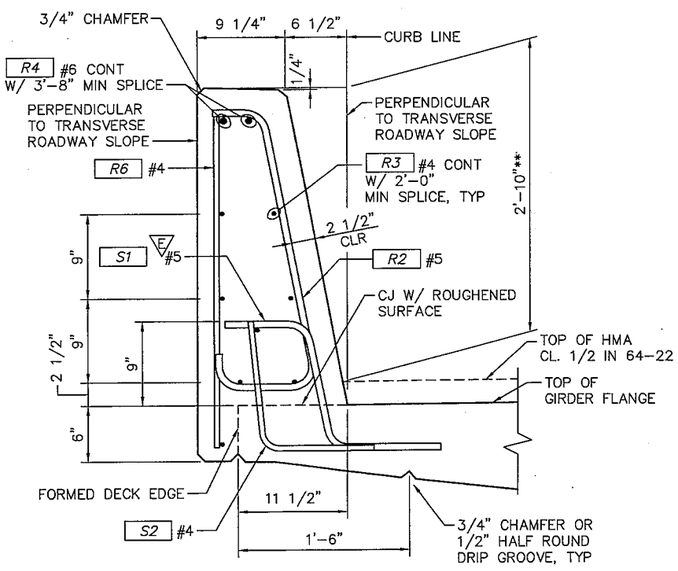

A – TYP SECTION – TRAFFIC BARRIER

SCALE: 1 1/2"=1'-0"

** HEIGHT MAY VARY TO PROVIDE A PROFILE PLEASING TO THE EYE.

NOTES:

1. FOR BARLIST SEE DWG S–21.

MARK	REVISION DESCRIPTION	BY	APP.	DATE

BergerABAM
33301 9th Avenue South, Suite 300
Federal Way, Washington 98003-2600
(206) 431-2300 Fax: (206) 431-2250

Lewis County Department of Public Works

CHARLES W. SPRY STATE OF WASHINGTON 21872 STRUCTURAL ENGINEER PROFESSIONAL ENGINEER

LEWIS COUNTY DEPT. OF PUBLIC WORKS
ENGINEER DATE

DRAWN BY LWC
DESIGN BY GAB
CHECK BY CWS
PROJ MGR CWS

LEWIS COUNTY DEPARTMENT OF PUBLIC WORKS
NEWAUKUM BRIDGE NO. 20 REPLACEMENT PROJECT

SINGLE SLOPE TRAFFIC BARRIER
SHEET 1

DRAWING NO. **S-20**
PROJECT NO. CRP 2072
FED AID NO. BRS-5667(002)
DATE: 12/15/09
SHEET NO. 42 OF 46

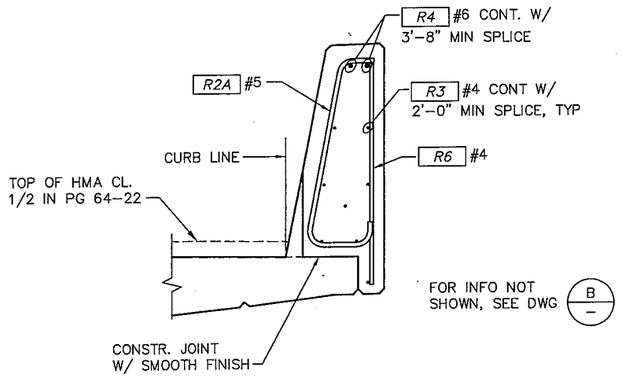

A/S-20 MODIFIED SECTION – TRAFFIC BARRIER
SCALE: 1"=1'-0"

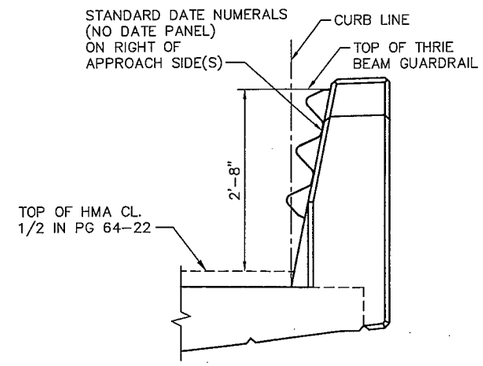

B/- SECTION – END VIEW
SCALE: 1"=1'-0" (WITH 'D' CONNECTION)

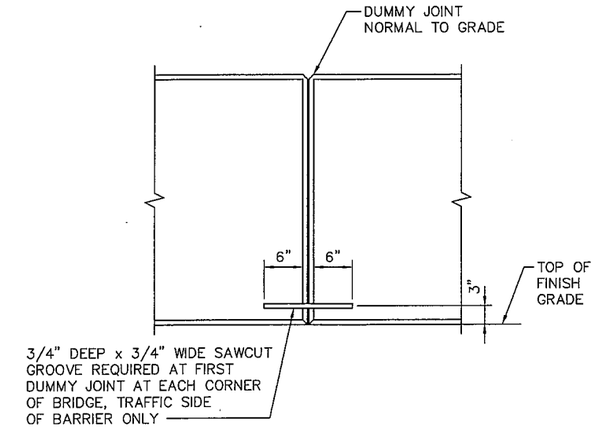

C/S-20 VIEW – DUMMY JOINT
SCALE: 1"=1'-0"

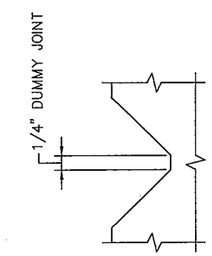

DETAIL – DUMMY JOINT
SCALE: NONE

TRAFFIC BARRIER BAR LIST

ALL REINFORCING SHALL BE AASHTO M31, GR. 60.

E DENOTES EPOXY COATED

MARK	SIZE	LENGTH	
R2	5	4'-3"	
R2A	5	(A)	
R3	4	(A)	STR.
R4	6	(A)	STR.
R6	4	3'-0"	STR.
R9	5	7'-5"	

(A) DETERMINE FROM PLANS

BENDING DIAGRAM (ALL DIMENSIONS ARE OUT TO OUT)

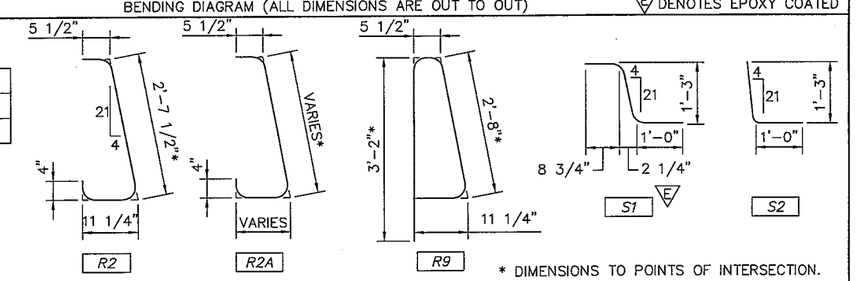

* DIMENSIONS TO POINTS OF INTERSECTION.

MARK	REVISION DESCRIPTION	BY	APP.	DATE

BergerABAM
33301 9th Avenue South, Suite 300
Federal Way, Washington 98003-2600
(206) 431-2300 Fax: (206) 431-2250

Lewis County Department of Public Works

CHARLES W. SPRY, STATE OF WASHINGTON, 21872, STRUCTURAL ENGINEER, PROFESSIONAL ENGINEER 12-16-09

LEWIS COUNTY DEPT. OF PUBLIC WORKS
ENGINEER DATE

DRAWN BY LWC
DESIGN BY GAB
CHECK BY CWS
PROJ MGR CWS

LEWIS COUNTY DEPARTMENT OF PUBLIC WORKS
NEWAUKUM BRIDGE NO. 20 REPLACEMENT PROJECT

SINGLE SLOPE TRAFFIC BARRIER
SHEET 2

DRAWING NO. **S-21**
PROJECT NO. CRP 2072
FED AID NO. BRS-5667(002)
DATE: 12/15/09
SHEET NO. 43 OF 46

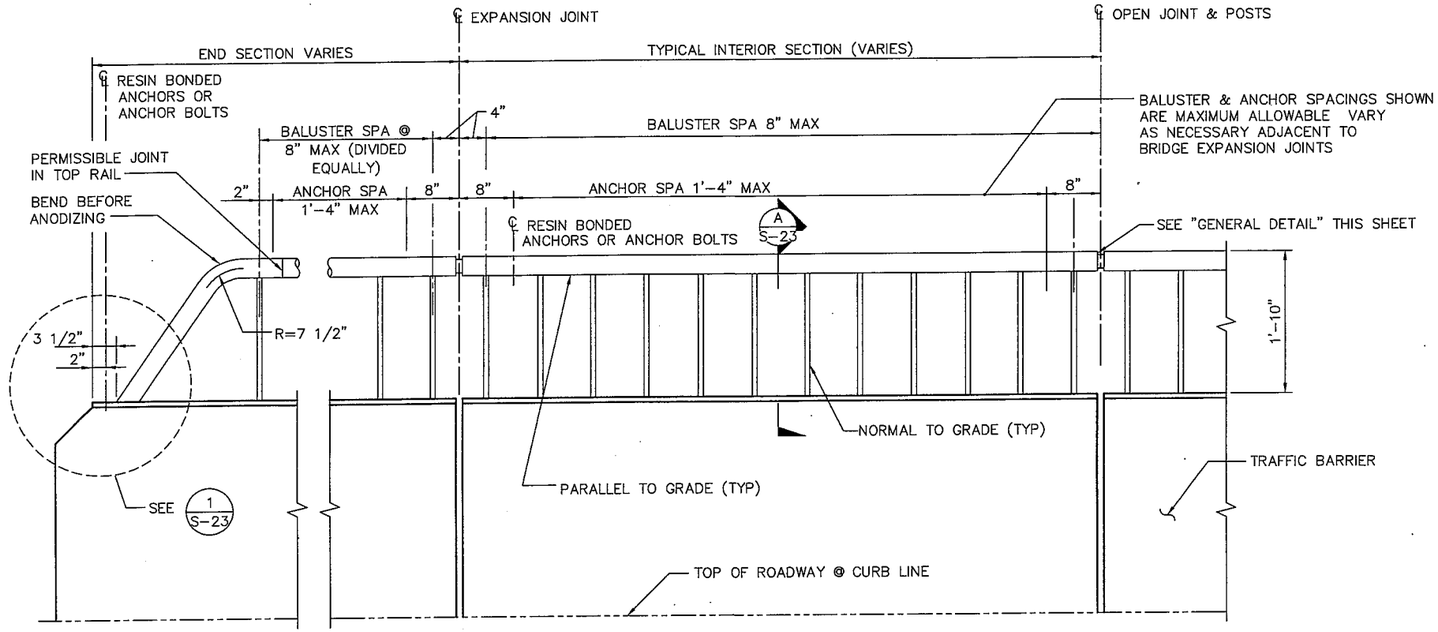

NOTES:

1. SHOP DRAWINGS OF RAILING SHALL BE SUBMITTED FOR APPROVAL SHOWING COMPLETE DIMENSIONS AND DETAILS OF FABRICATION AND INCLUDING AN ERECTION DIAGRAM. MATERIAL BEING USED SHALL BE SPECIFIED IN THE SHOP DRAWINGS.
2. ALL ALUMINUM PARTS SHALL BE GIVEN A CLEAR ANODIC COATING AT LEAST 0.0006" THICK, AND SHALL BE SEALED TO MEET THE REQUIREMENTS OF ASTM B 136 AND SHALL HAVE UNIFORM FINISH.
3. PIPE RAILING, PIPE RAILING SPLICES, COVER PLATES AND BOTTOM EXTRUDED CHANNELS MAY BE HEATED TO NOT MORE THAN 400°F FOR A PERIOD NOT TO EXCEED 30 MIN. TO FACILITATE FORMING OR BENDING.
4. CUTTING SHALL BE DONE BY SAWING OR MILLING AND ALL CUTS SHALL BE TRUE AND SMOOTH. FLAME CUTTING WILL NOT BE PERMITTED.
5. PIPE RAILING, PIPE BALUSTERS, PIPE RAILING SPLICES, COVER PLATES AND BOTTOM EXTRUDED CHANNELS SHALL BE ADEQUATELY WRAPPED TO ENSURE SURFACE PROTECTION DURING HANDLING AND TRANSPORTATION TO THE JOB SITE.
6. WELDING OF ALUMINUM SHALL BE IN ACCORDANCE WITH SECTION 5 OF THE LATEST AASHTO STANDARD SPECIFICATIONS FOR STRUCTURAL SUPPORTS FOR HIGHWAY SIGNS, LUMINAIRES AND TRAFFIC SIGNALS.

NOTE:
BALUSTER AND THRIE-BEAM GUARDRAIL ATTACHMENT DETAILS NOT SHOWN

ELEVATION
SCALE: NONE

NOTE:
"E" DIMENSION IS EQUAL TO "0" AS THERE IS NO EXPANSION JOINT FOR THE NEWAUKUM RIVER BRIDGE.

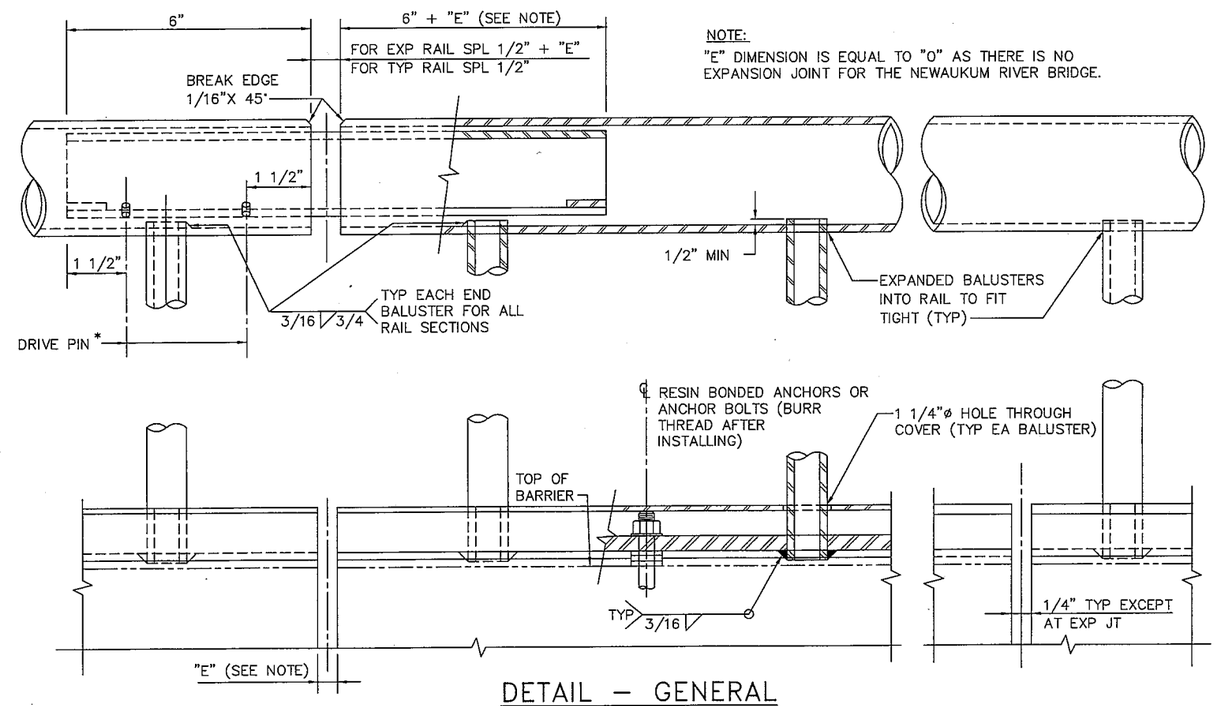

DETAIL – GENERAL
SCALE: NONE

MARK	REVISION DESCRIPTION	BY	APP.	DATE

BergerABAM
33301 9th Avenue South, Suite 300
Federal Way, Washington 98003-2600
(206) 431-2300 Fax: (206) 431-2250

Lewis County Department of Public Works

CHARLES W. SPRY, STATE OF WASHINGTON, 21872, STRUCTURAL ENGINEER, PROFESSIONAL ENGINEER 12-16-09

LEWIS COUNTY DEPT. OF PUBLIC WORKS
ENGINEER DATE

DRAWN BY LWC
DESIGN BY GAB
CHECK BY CWS
PROJ MGR CWS

LEWIS COUNTY DEPARTMENT OF PUBLIC WORKS
NEWAUKUM BRIDGE NO. 20 REPLACEMENT PROJECT

BRIDGE RAILING TYPE BP
SHEET 1

DRAWING NO. **S-22**
PROJECT NO. CRP 2072
FED AID NO. BRS-5667(002)
DATE: 12/15/09
SHEET NO. 44 OF 46

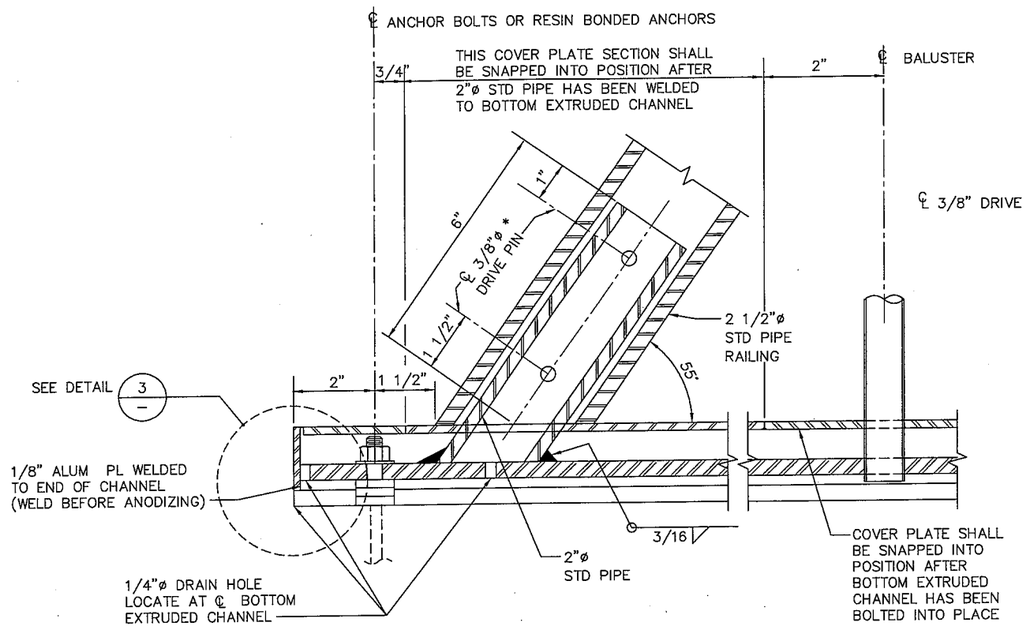

1/S-22 DETAIL
SCALE: NONE

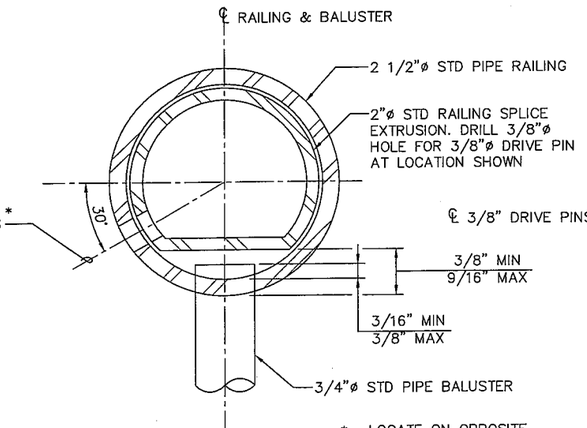

* LOCATE ON OPPOSITE SIDE OF TRAFFIC. DRIVE PINS SHALL BE DRIVEN FLUSH WITH THE OUTSIDE FACE OF THE RAILING

2/– DETAIL
SCALE: NONE
OPTION #1

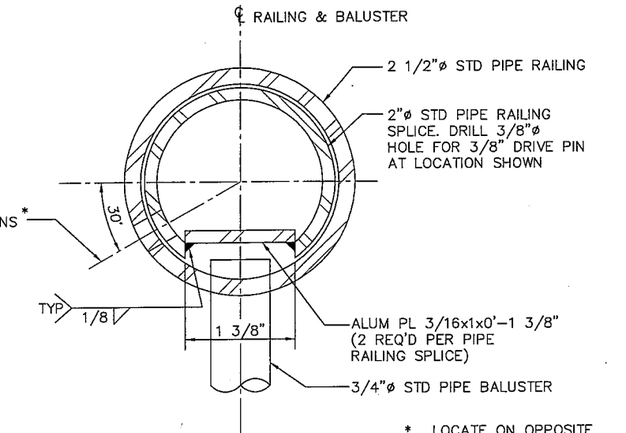

* LOCATE ON OPPOSITE SIDE OF TRAFFIC. DRIVE PINS SHALL BE DRIVEN FLUSH WITH THE OUTSIDE FACE OF THE RAILING

2/– DETAIL
SCALE: NONE
OPTION #2

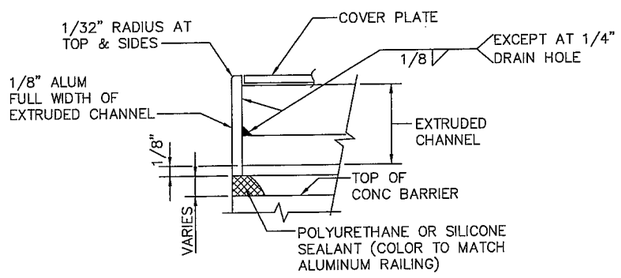

3/– DETAIL
SCALE: NONE
DRAIN HOLES NOT SHOWN

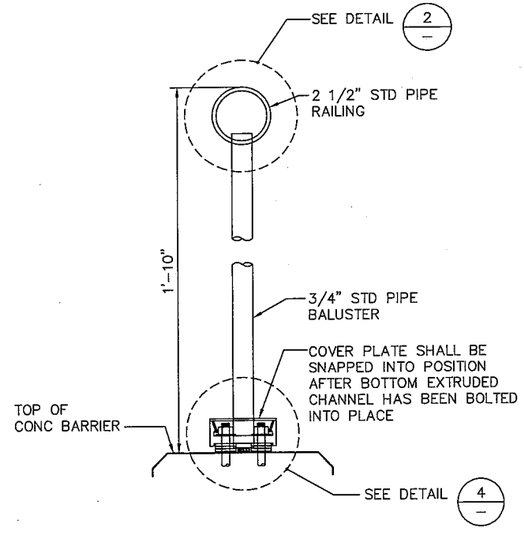

A/S-22 SECTION
SCALE: NONE

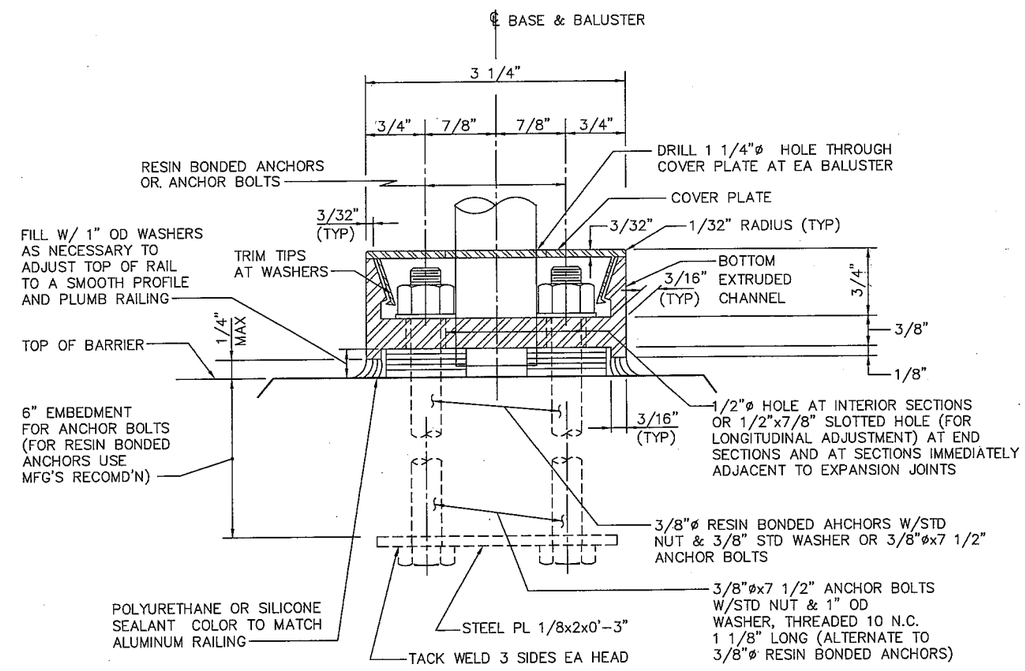

4/– DETAIL
SCALE: NONE

ANCHOR BOLTS SHALL BE POSITIONED IN A JIG DURING WELDING

MAT'L	PART	MATERIAL SPECIFICATION
ALUMINUM	PIPES	ASTM B241 OR B429 ALLOY 6001–T6 OR 6005–T5 SCHEDULE 40 (STD PIPE)
ALUMINUM	EXTRUDED CHANNELS & COVER PLATES	ASTM B221 ALLOY 6001–T6 OR 6005–T5
STEEL	ANCHOR BOLTS, NUTS & WASHERS	AASHTO M164 (GALVANIZE IN ACCORDANCE WITH AASHTO SPECIFICATION M232)
STEEL	PLATES	AASHTO M 183
STEEL	DRIVE PINS	ASTM A–276 TYPE 300 STAINLESS STEEL

MARK	REVISION DESCRIPTION	BY	APP.	DATE

BergerABAM
33301 9th Avenue South, Suite 300
Federal Way, Washington 98003-2600
(206) 431-2300 Fax: (206) 431-2250

Lewis County Department of Public Works

CHARLES W. SERY, STATE OF WASHINGTON, 21872, STRUCTURAL ENGINEER, PROFESSIONAL ENGINEER, 12-16-09

LEWIS COUNTY DEPT. OF PUBLIC WORKS
ENGINEER DATE

DRAWN BY LWC
DESIGN BY GAB
CHECK BY CWS
PROJ MGR CWS

LEWIS COUNTY DEPARTMENT OF PUBLIC WORKS
NEWAUKUM BRIDGE NO. 20 REPLACEMENT PROJECT

BRIDGE RAILING TYPE BP
SHEET 2

DRAWING NO. S-23
PROJECT NO. CRP 2072
FED AID NO. BRS-5667(002)
DATE: 12/15/09
SHEET NO. 45 OF 46

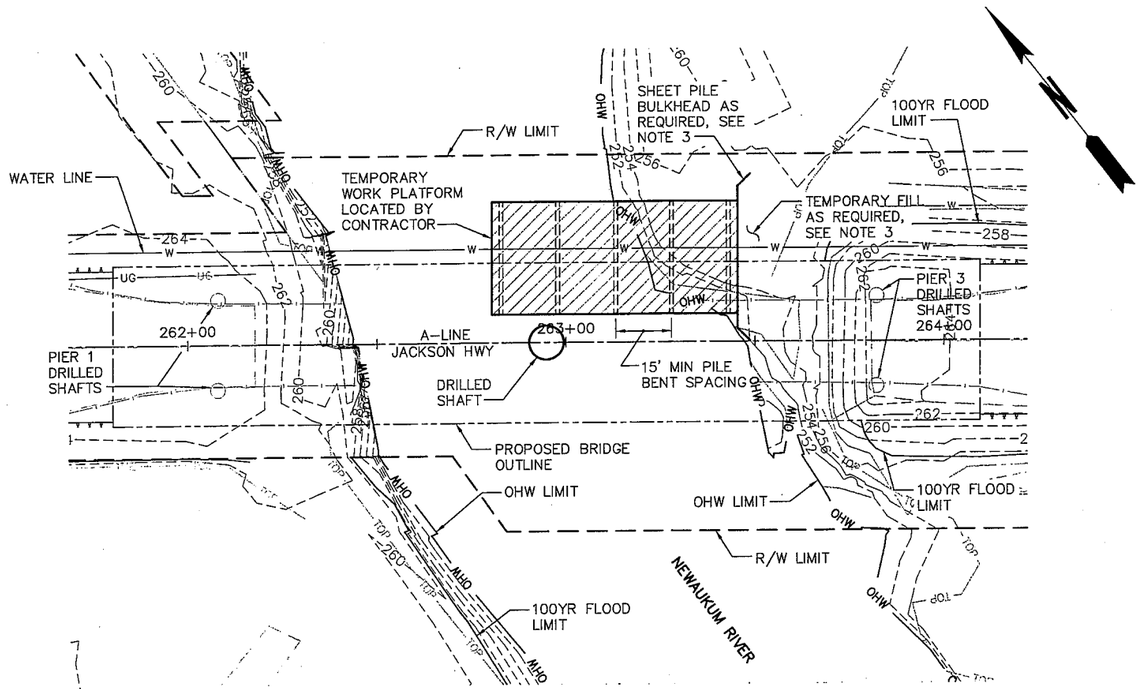

PLAN – TEMPORARY WORK PLATFORM

SCALE: 1"=20'

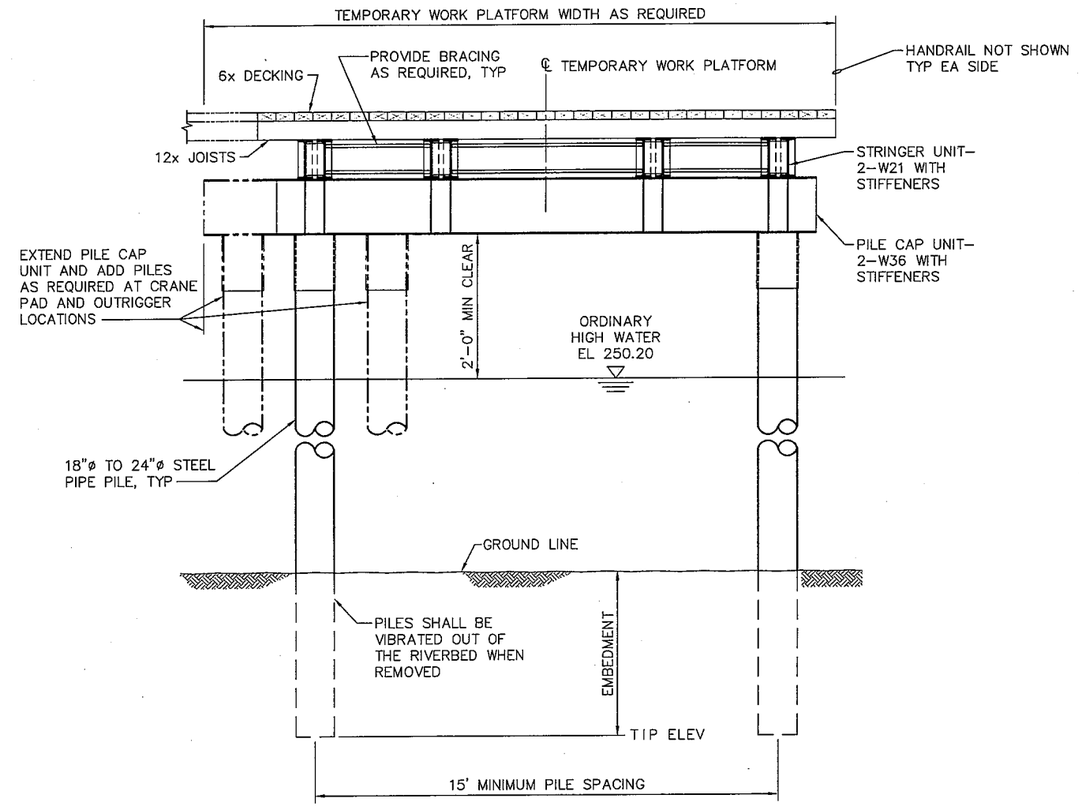

TYPICAL SECTION–TEMPORARY WORK PLATFORM

NOTES:

1. LOCATION, DIMENSIONS, AND MEMBER SIZES FOR THE TEMPORARY WORK PLATFORM ARE SCHEMATIC ONLY. ACTUAL LOCATION, DIMENSIONS, AND MEMBER SIZES SHALL BE DETERMINED BY THE CONTRACTOR EXCEPT FOR THE MAXIMUM PILE SIZE AND MINIMUM PILE SPACING. PILE BENT SPACING MAY BE INCREASED IF REQUIRED TO ACCOMMODATE THE CONTRACTOR'S PROPOSED ERECTION METHOD. THE CONTRACTOR SHALL SUBMIT A PROPOSED CONSTRUCTION METHOD TO THE ENGINEER FOR APPROVAL PRIOR TO THE START OF CONSTRUCTION.
2. CONSTRUCTION OF THE TEMPORARY WORK PLATFORM COMPONENTS LYING WITHIN THE WETTED PERIMETER OF ORDINARY HIGH WATER (ELEV 250.20), OR LESS THAN FIVE FEET OUTSIDE THE WETTED PERIMETER, MAY ONLY OCCUR BETWEEN JULY 1 AND SEPTEMBER 30. PROOF TESTING OF PILES WITH IMPACT HAMMER MAY ONLY OCCUR BETWEEN JULY 1 AND SEPTEMBER 30.
3. ALL TEMPORARY FILL REQUIRED FOR ACCESSING THE TEMPORARY WORK PLATFORM SHALL BE RETAINED BY A TEMPORARY SHEET PILE BULKHEAD SET A MINIMUM OF 5 FEET OUTSIDE THE ORDINARY HIGH WATER WETTED PERIMETER.
4. THE CONTRACTOR SHALL SUBMIT DETAILED PLANS AND A SCHEDULE FOR THE TEMPORARY WORK PLATFORM CONSTRUCTION AND REMOVAL PRIOR TO THE START OF CONSTRUCTION, AS REQUIRED BY THE SPECIAL PROVISIONS. CONSTRUCTION AND REMOVAL MUST TAKE PLACE ONLY DURING THE TIME ALLOWED BY PERMITS.
5. THE CONTRACTOR AND THEIR ENGINEER SHALL SELECT THE PILE SIZE, ALL MEMBER THICKNESSES AND FACTORS OF SAFETY, AND VERIFY PILE CAPACITIES DURING PILE INSTALLATION.
6. REMOVAL OPERATIONS SHALL BE PERFORMED WITHOUT DAMAGE TO ANY PORTION OF THE NEWAUKUM RIVER BRIDGE, OTHER STRUCTURES, ROADS OR OTHER FACILITIES THAT ARE TO REMAIN IN PLACE.
7. UPON REMOVAL, ALL TEMPORARY WORK PLATFORM AND PILE BENT MATERIALS BECOME THE PROPERTY OF THE CONTRACTOR AND SHALL BE DISPOSED OF BY THE CONTRACTOR.
8. A BUBBLE CURTAIN MUST BE INSTALLED PRIOR TO USING IMPACT HAMMER FOR PROOF TESTING PILES. SEE SPECIAL PROVISIONS FOR BUBBLE CURTAIN DETAILS.

AVOID CUTTING UNDERGROUND UTILITY LINES. IT'S COSTLY.
Call before you Dig
1-800-424-5555
UNDERGROUND SERVICE (USA)

NOTE:
EXISTING UTILITY LOCATIONS SHOWN HEREON ARE APPROXIMATE ONLY. IT SHALL BE THE CONTRACTOR'S RESPONSIBILITY TO DETERMINE THE EXACT VERTICAL AND HORIZONTAL LOCATION OF ALL EXISTING UNDER-GROUND AND OVERHEAD UTILITIES PRIOR TO COMMENCING CONSTRUCTION. NO REPRESENTATION IS MADE THAT ALL EXISTING UTILITIES ARE SHOWN HEREON. THE ENGINEER ASSUMES NO RESPONSIBILITY FOR UTILITIES NOT SHOWN OR UTILITIES NOT SHOWN IN THEIR PROPER LOCATION.

MARK	REVISION DESCRIPTION	BY	APP.	DATE

BergerABAM
33301 9th Avenue South, Suite 300
Federal Way, Washington 98003-2600
(206) 431-2300 Fax: (206) 431-2250

Lewis County Department of Public Works

CHARLES W. SPRY, STATE OF WASHINGTON, 21872, STRUCTURAL ENGINEER, PROFESSIONAL ENGINEER, 12-16-09

LEWIS COUNTY DEPT. OF PUBLIC WORKS
ENGINEER DATE

DRAWN BY LWC
DESIGN BY GAB
CHECK BY CWS
PROJ MGR CWS

LEWIS COUNTY DEPARTMENT OF PUBLIC WORKS
NEWAUKUM BRIDGE NO. 20 REPLACEMENT PROJECT
TEMPORARY WORK PLATFORM

DRAWING NO. S-24
PROJECT NO. CRP 2072
FED AID NO. BRS-5667(002)
DATE: 12/15/09
SHEET NO. 46 OF 46